深圳贯虹自动化有限公司
Shenzhen Guanhong Automation CO.,LTD.

ROBOT CATALOG

Industrial Robot Model Selection Catalog





SHENZHEN GUANHONG AUTOMATION CO,. LTD.

Address: Room 201, Building 5, South Digital Innovation Industrial Base, No. 80, Pusha Road, Liuyue Community, Henggang Street, Longgang District, Shenzhen, Guangdong, China

Tel: +86 755 26099399

Email: sales04@szghauto.com

Mobile: +86 199 2871 1953 (whatsapp&wechat)

Wechat

Whatsapp

Please scan the QR code to consult us

www.szgh-auto.com

CONTENTS

01 About SZGH

Company profile
Certificate & Honor
Product Family Overview

01-04

02 SZGH-T General-purpose Series

SZGH-T9905
SZGH-T750-B-6
SZGH-T950-A-6
SZGH-T1000-C-6
SZGH-T1500-C-6
SZGH-T1850-D-6
SZGH-T2100-C-6
SZGH-T2100-E-6
SZGH-T2300-3C-6
SZGH-T2950-3C-6

05-24

03 SZGH-M Grinding Series

SZGH-M1000-E-6
SZGH-M1400-3C-6
SZGH-M1850-3C-6

25-30

04 SZGH-B Handling Series

SZGH-G1000-B-4
SZGH-B1500-C-4
SZGH-B1850-3C-4
SZGH-B2100-F-4
SZGH-B2300-E-4
SZGH-B3100-G-4

31-42

05 SZGH-P Painting Series

SZGH-P1500-B-6
SZGH-P1950-B-6

43-46

06 SZGH-H Welding Series

SZGH-H1500-B-6
SZGH-H2100-B-6
SZGH-HZ1500-B-6
SZGH-HZ2000-B-6

47-54

07 SZGH-S Scara Robots

SZGH-S450-B-4
SZGH-S600-B-4
SZGH-S800-B-4

55-60

08 SZGH-Arm Four-axis cooperative Robots

SZGH-Arm-1832
SZGH-Arm 2442
SZGH-Arm-4160

61-66

09 Positioners & Slide rail

Single-axis positioner
Two-axis positioner
Three-axis positioner
Robot walking slide rail

67-76

10 Control System

Features of Robot Control System
Technical Data of Robot Control System
Control Cabinet Parameters

77-81

11 Application display and technical support

Application Industry
Application Scenarios
Product Exhibition Center
Automation Engineering Services
Professional Non-standard Customization

82-86



COMPANY PROFILE

ShenZhen GuanHong Automation Co.,LTD(short name SZGH, was established on November 19, 2013) is one of the leading Robotic&CNC Automation company in China, which are professional in designing, developing and manufacturing more than 40 models Robotic arm in mass production, including general-purpose series, welding series, spraying series, palletizing series, grinding and handling series. All models are equipped with an intelligent robot control system which independently developed by us. Besides, our products all have passed and got the European safety standards- CE certification.

Over the years, SZGH has gradually shifted from the CNC industry to the research and development of industrial robots, focusing on the research and development of core technologies.

SZGH was awarded as New high-tech enterprise in China since 2018, which rely on Technical Center force to do support, efficient, strict quality management team to guide, software and hardware facilities, first-class service.

There are many agents around the world, such as USA, Romania, Turkey, Russia, Egypt, Morocco, Moldova etc .

Our tenet is Customer First!



SZGH has a strong technical force and has gathered top domestic technical talents. With strong comprehensive strength, we provide efficient and professional robotic arms and related product solutions for our clients. During this period, we obtained more than 100 patents and won many domestic awards.





SZGH-T series is a 6-axis robot arm that can support multiple purposes, including welding, loading and unloading, etc.



SZGH-M series is a 6-axis industrial robotic arm professionally used for grinding, polishing and deburring.



SZGH-B series is a 4-axis robotic arm professionally used in loading and unloading handling and palletizing.



SZGH-P series is a 6-axis industrial robotic arm professionally used in spraying powder. It is often used with a 3-axis positioner.



SZGH-H series is a 6-axis industrial robotic arm professionally used in welding process. Different types of welders can be selected according to the requirements.



SZGH-S series is a lightweight 4-axis industrial robotic arm mainly used for loading, unloading, handling and palletizing.



SZGH-Arm series is an innovative lightweight drive control integrated 4-axis cooperative manipulator that dares to overturn the industry standard scheme.



The positioners and the robot walking slide rail are often used together with the robot, which can maximize the working range and performance utilization of the robot.

SZGH-T9905

Payload		5KG
Reach		990mm
Structure		Articulated
Number of axes		6
Repeatability		±0.03mm
Max. motion range	Axis 1	±165°
	Axis 2	+120°/-75°
	Axis 3	+85°/-100°
	Axis 4	±185°
	Axis 5	+30°/-230°
	Axis 6	±360°
Max. speed	Axis 1	225°/sec
	Axis 2	225°/sec
	Axis 3	225°/sec
	Axis 4	225°/sec
	Axis 5	225°/sec
	Axis 6	225°/sec
Weight		≈55kg
Mounting type		Ground, bracket, ceiling
Ambient temperature		5°C ~ 45°C



Main Applications

Materials Handling | Parts Transfer | Machine Management | Testing | Gluing | Assembly

Application Case

Experimental teaching platform

SZGH-T9905 is a small desktop robot featuring short work cycle, reliable operation and high cost performance. It is widely used for various experimental teaching platforms and the students' repair, disassembly and assembly courses. The figure shows a customer's experimental teaching platform which realizes sorting and positioning of materials in combination with computer visual identification.

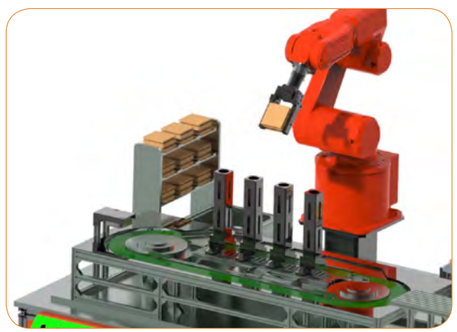

Robot Motion Range

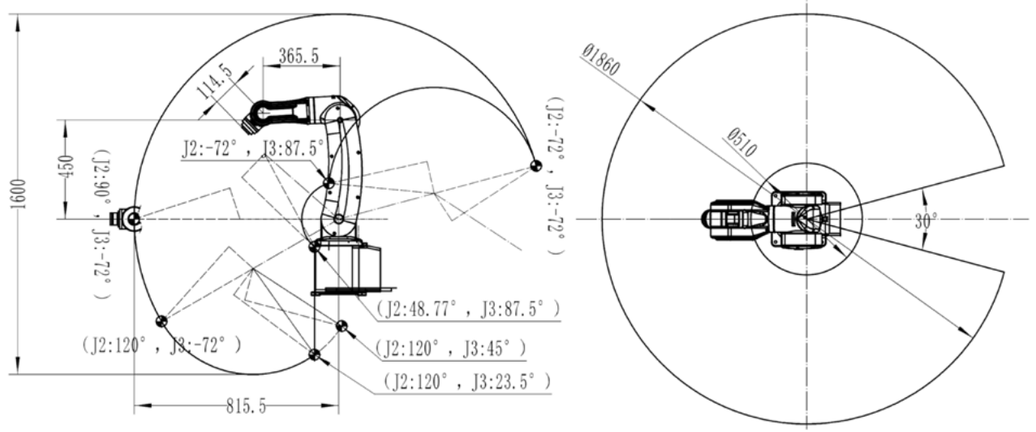

Robot Flange Connection

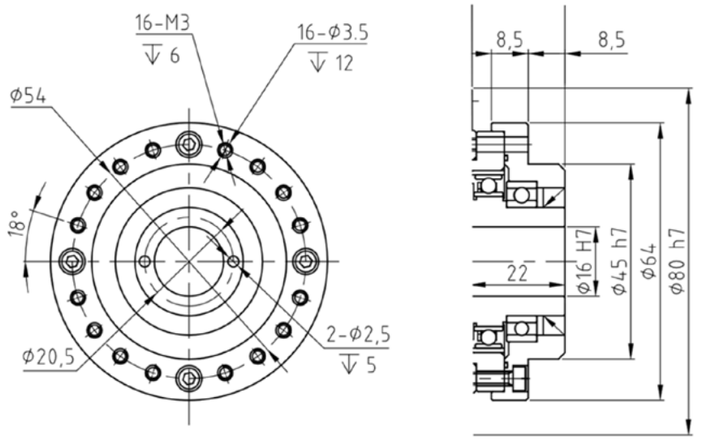

Robot Base Installation

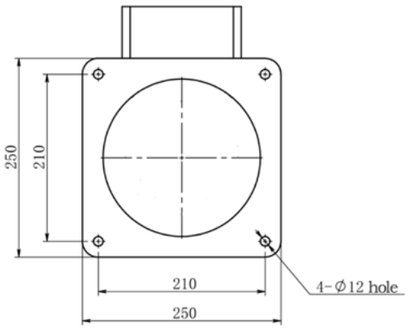

SZGH-T750-B-6

Payload		6KG
Reach		750mm
Structure		Articulated
Number of axes		6
Repeatability		±0.05mm
Max. motion range	Axis 1	±165°
	Axis 2	+135°/-70°
	Axis 3	+85°/-85°
	Axis 4	±150°
	Axis 5	+30°/-240°
	Axis 6	±360°
Max. speed	Axis 1	148°/sec
	Axis 2	148°/sec
	Axis 3	222°/sec
	Axis 4	222°/sec
	Axis 5	222°/sec
	Axis 6	360°/sec
Weight		≈85kg
Mounting type		Ground, bracket, ceiling
Ambient temperature		5°C ~ 45°C



Main Applications

Materials Handling | Parts Transfer | Machine Management | Testing | Gluing | Assembly

Application Case

Experimental teaching platform

SZGH-T750-B-6 is a small desktop robot featuring short work cycle, reliable operation and high cost performance. It is widely used for various experimental teaching platforms and the students' repair, disassembly and assembly courses. The figure shows a customer's experimental teaching platform which realizes sorting and positioning of materials in combination with computer visual identification.

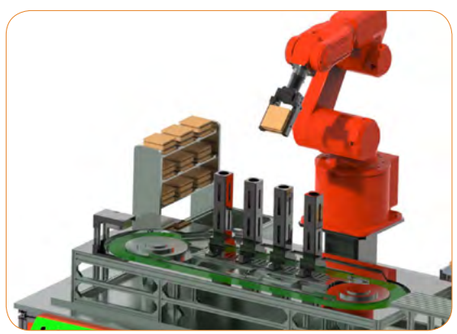

Robot Motion Range

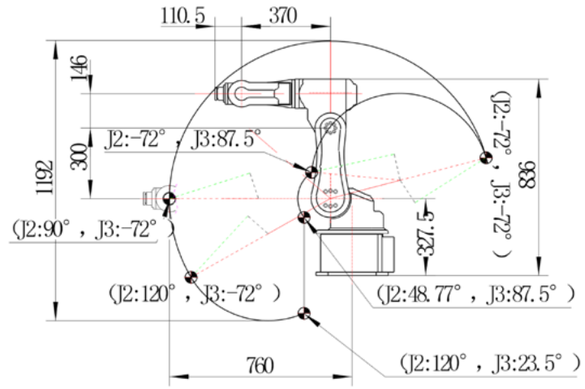

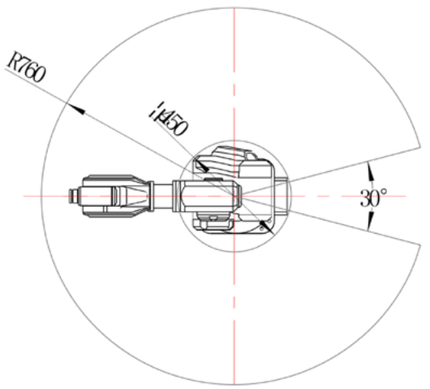

Robot Flange Connection

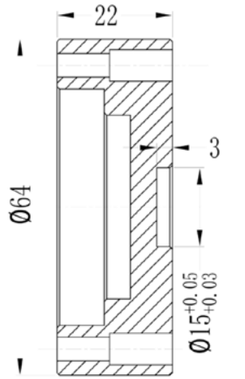

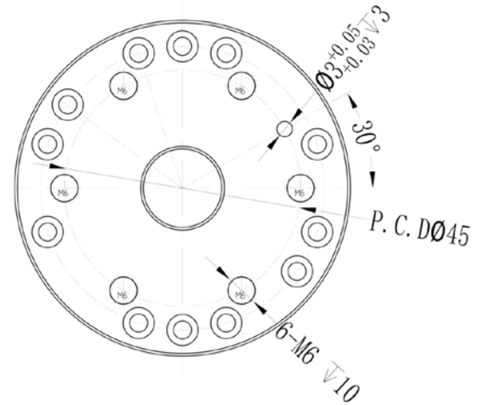

Robot Base Installation

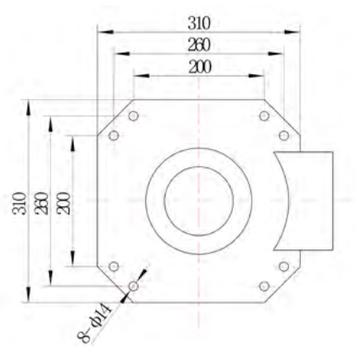

SZGH-T950-A-6

Payload		3KG
Reach		950mm
Structure		Articulated
Number of axes		6
Repeatability		±0.05mm
Max. motion range	Axis 1	±165°
	Axis 2	+135°/-70°
	Axis 3	+85°/-85°
	Axis 4	±150°
	Axis 5	+30°/-240°
	Axis 6	±360°
Max. speed	Axis 1	148°/sec
	Axis 2	148°/sec
	Axis 3	148°/sec
	Axis 4	222°/sec
	Axis 5	222°/sec
	Axis 6	360°/sec
Weight		≈86kg
Mounting type		Ground, bracket, ceiling
Ambient temperature		5°C ~ 45°C



Main Applications

Materials Handling | Parts Transmission | Electric Welding | Machine Management | Stacking | Packaging | Testing | Deburring | Grinding | Gluing | Assembly

Application Case

Laboratory aging test

SZGH-T950-A-6 is a small robot with short working cycle, reliable operation and high cost performance. It has been tested in previous industrial applications, with outstanding performance, high added value and fast return on investment, which can help you greatly improve your production efficiency.The picture shows the customer's field application. This robot is used in the customer's aging test laboratory.



Robot Motion Range

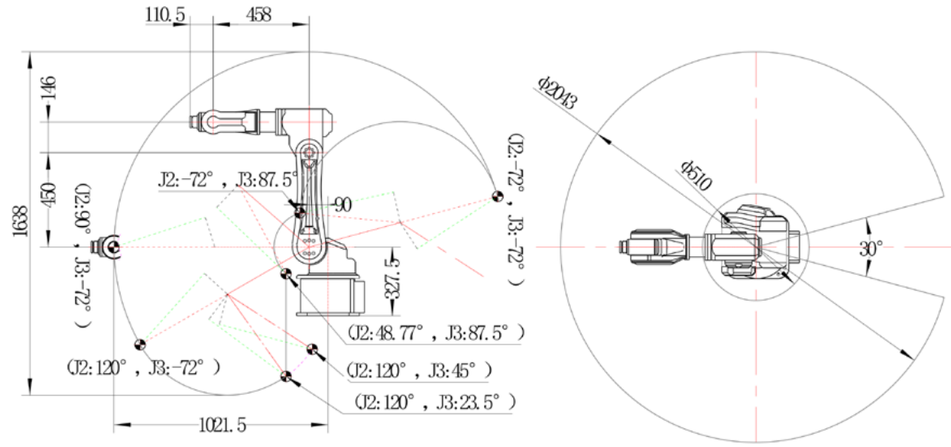

Robot Flange Connection

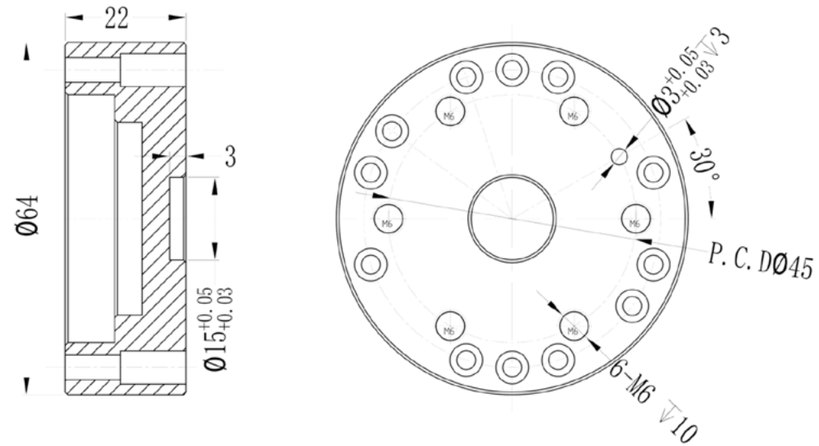

Robot Base Installation

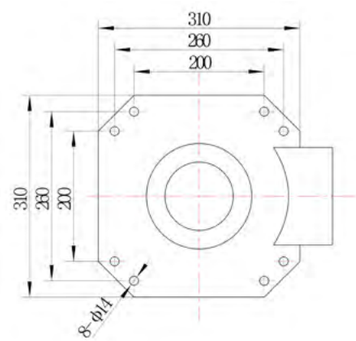

SZGH-T1000-C-6

Payload		10KG
Reach		1000mm
Structure		Articulated
Number of axes		6
Repeatability		±0.05mm
Max. motion range	Axis 1	±165°
	Axis 2	+135°/-70°
	Axis 3	+85°/-85°
	Axis 4	±150°
	Axis 5	+30°/-240°
	Axis 6	±360°
Max. speed	Axis 1	148°/sec
	Axis 2	148°/sec
	Axis 3	148°/sec
	Axis 4	222°/sec
	Axis 5	222°/sec
	Axis 6	222°/sec
Weight		≈130kg
Mounting type		Ground, bracket, ceiling
Ambient temperature		5℃ ~ 45℃



Main Applications

Materials Handling | Parts Transmission | Electric Welding | Machine Management | Stacking | Packaging | Testing | Deburring | Grinding | Gluing | Assembly

Application Case

Loading and unloading on NC lathe

The figure shows a NC lathe automatic loading &unloading solution provided for a customer. Combined with the production line, one robot can manage two face-to-face NC machines, thereby significantly reducing labor cost and time cost and enhancing productivity of the customer.



Robot Motion Range

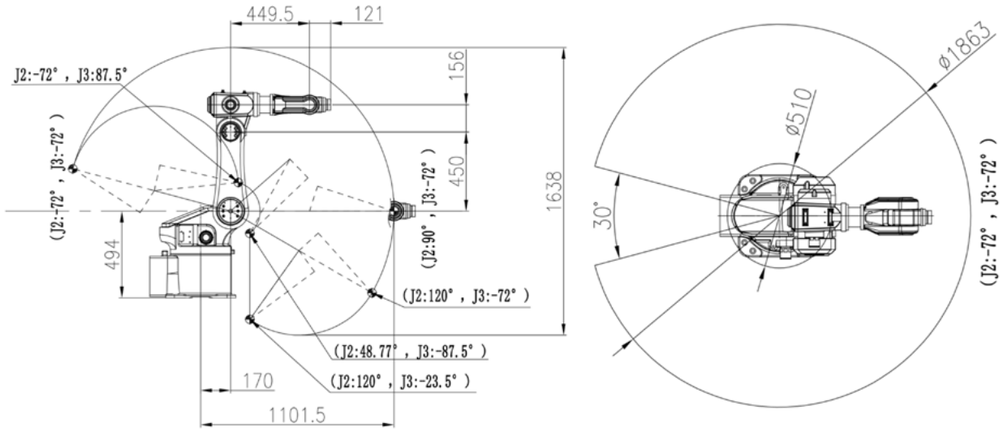

Robot Flange Connection

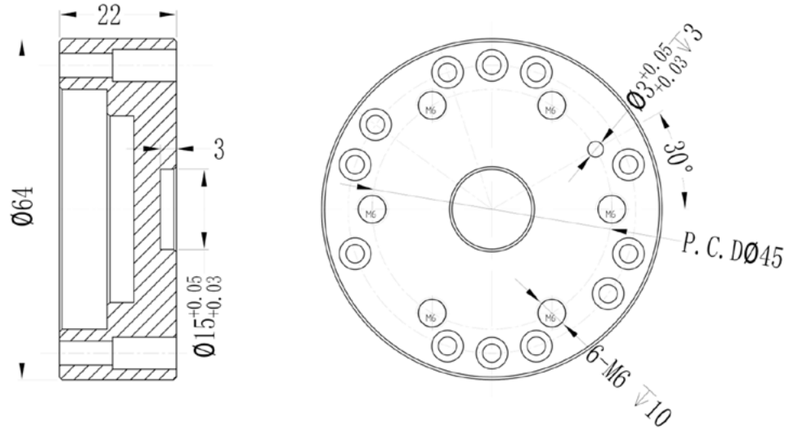

Robot Base Installation

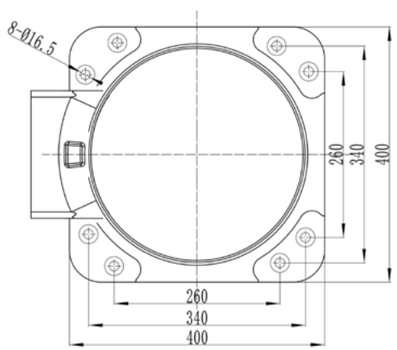

SZGH-T1500-C-6

Payload		10KG
Reach		1500mm
Structure		Articulated
Number of axes		6
Repeatability		±0.05mm
Max. motion range	Axis 1	±165°
	Axis 2	+135°/-70°
	Axis 3	+85°/-85°
	Axis 4	±150°
	Axis 5	+30°/-240°
	Axis 6	±360°
Max. speed	Axis 1	148°/sec
	Axis 2	148°/sec
	Axis 3	148°/sec
	Axis 4	222°/sec
	Axis 5	222°/sec
	Axis 6	222°/sec
Weight		≈150kg
Mounting type		Ground, bracket, ceiling
Ambient temperature		5℃ ~ 45℃



Main Applications

Materials Handling | Parts Transmission | Electric Welding | Machine Management | Stacking | Packaging | Testing | Deburring | Grinding | Gluing | Assembly

Application Case

Loading and unloading on NC lathe

The figure shows a NC lathe automatic loading &unloading solution provided for a customer. Combined with the production line, one robot can manage two face-to-face NC machines, thereby significantly reducing labor cost and time cost and enhancing productivity of the customer.



Robot Motion Range

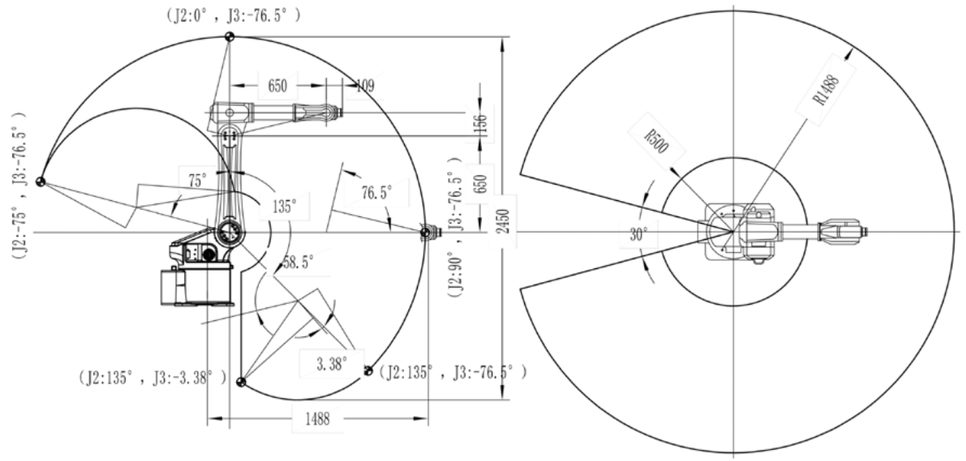

Robot Flange Connection

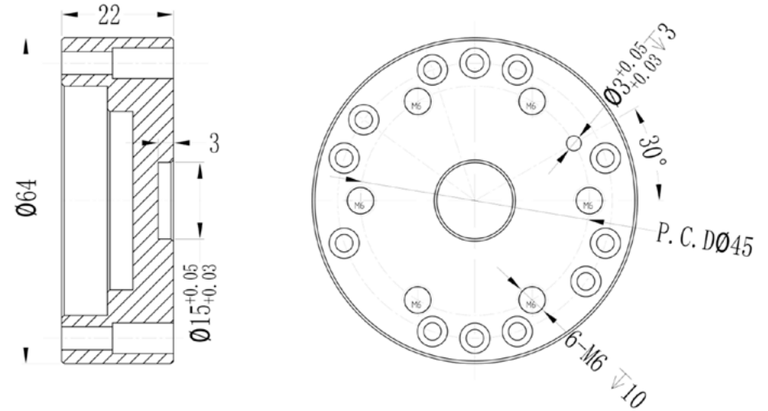

Robot Base Installation

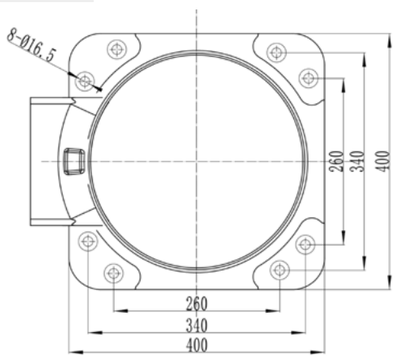

SZGH-T1850-D-6

Payload		20KG
Reach		1850mm
Structure		Articulated
Number of axes		6
Repeatability		±0.08mm
Max. motion range	Axis 1	±170°
	Axis 2	+135°/-70°
	Axis 3	+60°/-85°
	Axis 4	±150°
	Axis 5	+30°/-240°
	Axis 6	±360°
Max. speed	Axis 1	148°/sec
	Axis 2	148°/sec
	Axis 3	148°/sec
	Axis 4	222°/sec
	Axis 5	222°/sec
	Axis 6	222°/sec
Weight		≈250kg
Mounting type		Ground, bracket, ceiling
Ambient temperature		5°C ~ 45°C



Main Applications

Materials Handling | Parts Transmission | Electric Welding | Machine Management | Stacking | Packaging | Testing | Deburring | Grinding | Gluing | Assembly

Application Case

Loading and unloading on NC lathe

SZGH-T1850-D-6 robot has a payload of 20 kg and is widely used in handling, painting, loading and unloading for machine tools, screw tightening, surface mounting and other applications. One 6-axis robot can work independently and efficiently in cellular manufacturing processes. The figure shows the loading and unloading of small precision parts for a lathe of a customer.



SZGH-T General-purpose Series
SZGH-M Grinding Series
SZGH-B Handling Series
SZGH-P Painting Series
SZGH-H Welding Series
SZGH-S Scara Robots
SZGH-Arm Four-axis cooperative Robots
Positioners
Robot walking slide rail
Control System
Application display and technical support

Robot Motion Range

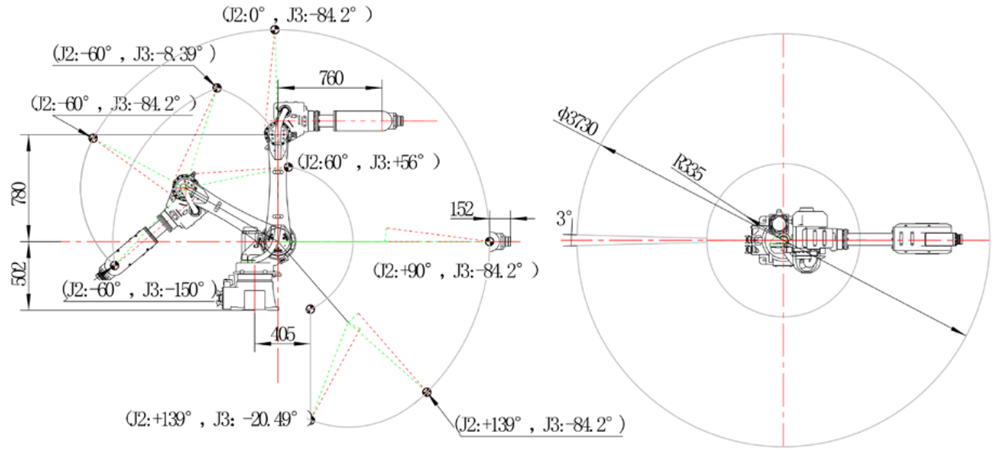

Robot Flange Connection

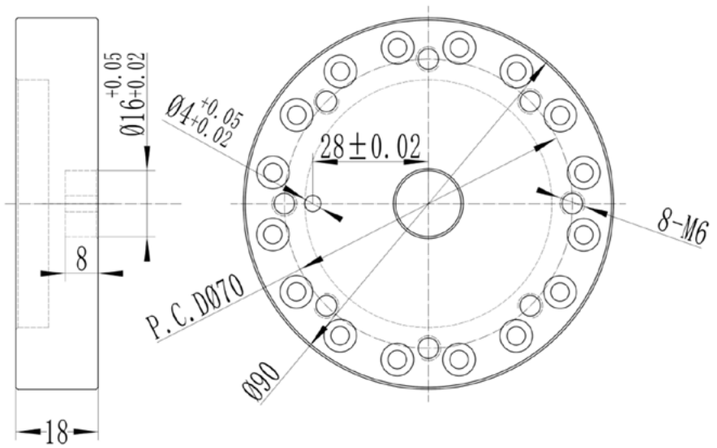

Robot Base Installation

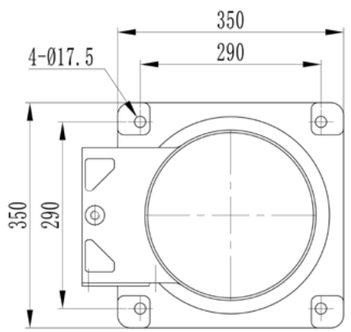

SZGH-T General-purpose Series
SZGH-M Grinding Series
SZGH-B Handling Series
SZGH-P Painting Series
SZGH-H Welding Series
SZGH-S Scara Robots
SZGH-Arm Four-axis cooperative Robots
Positioners
Robot walking slide rail
Control System
Application display and technical support

SZGH-T2100-C-6

Payload		10KG
Reach		2100mm
Structure		Articulated
Number of axes		6
Repeatability		±0.08mm
Max. motion range	Axis 1	±115°
	Axis 2	+120°/-70°
	Axis 3	+60°/-75°
	Axis 4	±150°
	Axis 5	+30°/-240°
	Axis 6	±360°
Max. speed	Axis 1	148°/sec
	Axis 2	148°/sec
	Axis 3	148°/sec
	Axis 4	222°/sec
	Axis 5	222°/sec
	Axis 6	222°/sec
Weight		≈255kg
Mounting type		Ground, bracket, ceiling
Ambient temperature		5°C ~ 45°C



Main Applications

Materials Handling | Parts Transmission | Electric Welding | Machine Management | Stacking | Packaging | Testing | Deburring | Grinding | Gluing | Assembly

Application Case

Operation in a cable shop

The figure shows a cable packaging line of a customer. Here, one robot simultaneously replaces multiple field operators, thus reducing the company's production cost, enhancing its efficiency and improving conformity of product appearance.



Robot Motion Range

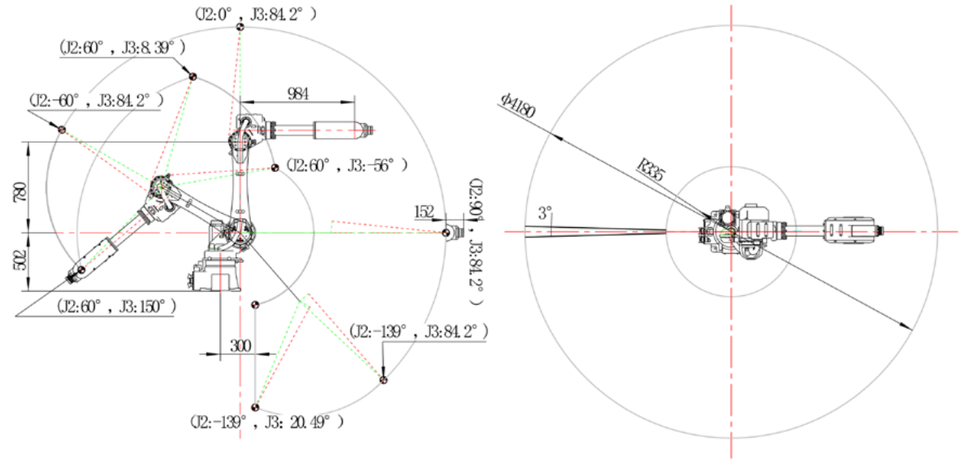

Robot Flange Connection

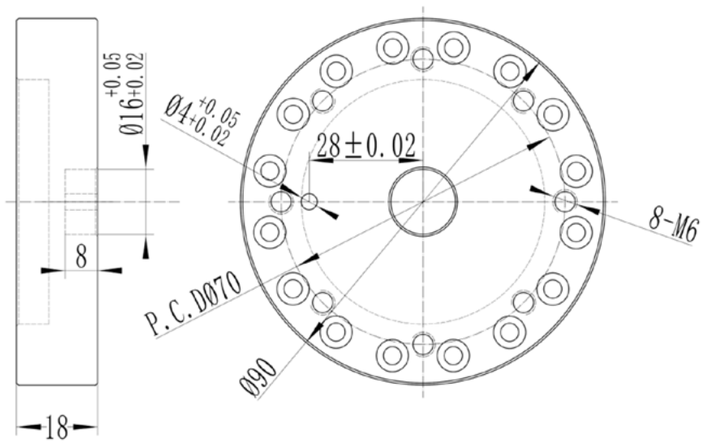

Robot Base Installation

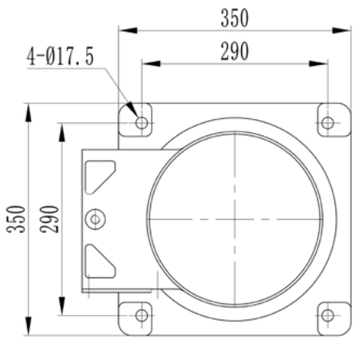

SZGH-T2100-E-6

Payload		50kg
Reach		2100mm
Structure		Articulated
Number of axes		6
Repeatability		±0.1mm
Max. motion range	Axis 1	±175°
	Axis 2	+120°/-70°
	Axis 3	+60°/-75°
	Axis 4	±150°
	Axis 5	+20°/-200°
	Axis 6	±360°
Max. speed	Axis 1	60°/sec
	Axis 2	148°/sec
	Axis 3	148°/sec
	Axis 4	222°/sec
	Axis 5	222°/sec
	Axis 6	222°/sec
Weight		≈750kg
Mounting type		Ground, bracket, ceiling
Ambient temperature		5°C ~ 45°C



Main Applications

Materials Handling | Parts Transmission | Stacking | deburring | cutting

Application Case

Loading and unloading of heavy cable

SZGH-T2100-E-6 robot has a load of 50kg, which is the six axis joint robot with the largest load.
The picture shows a customer using this type of robot produced by our company to load and unload heavier cables.



Robot Motion Range

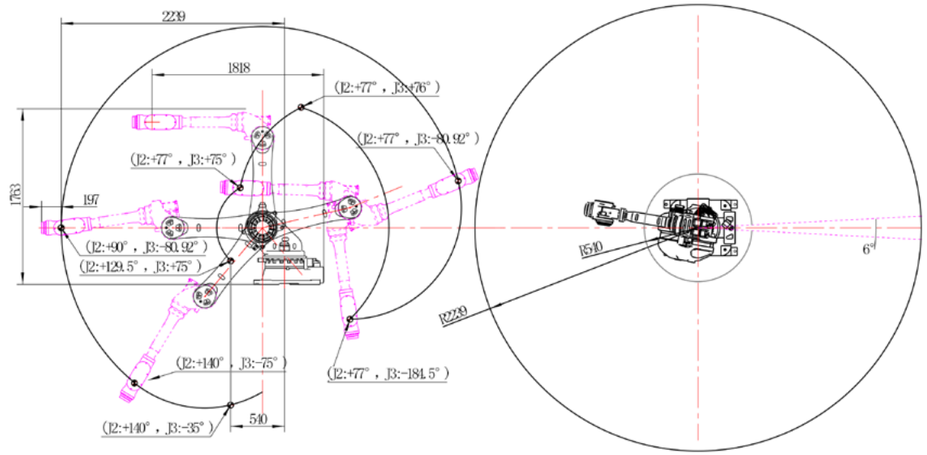

Robot Flange Connection

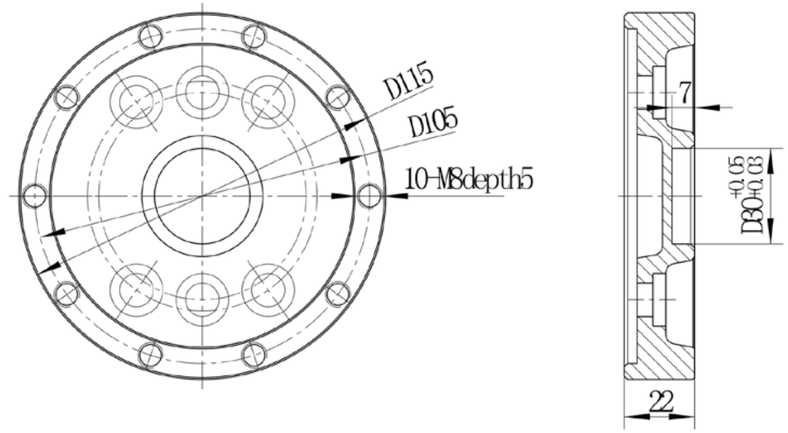

Robot Base Installation

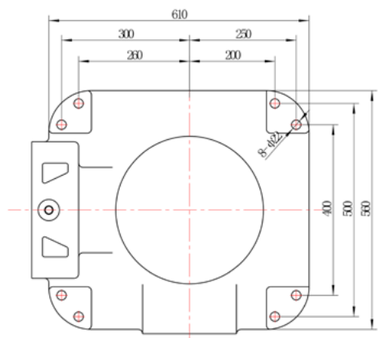

SZGH-T2300-3C-6

Payload		30kg
Reach		2300mm
Structure		Articulated
Number of axes		6
Repeatability		±0.15mm
Max. motion range	Axis 1	±175°
	Axis 2	+120°/-70°
	Axis 3	+60°/-75°
	Axis 4	±150°
	Axis 5	+30°/-240°
	Axis 6	±360°
Max. speed	Axis 1	60°/sec
	Axis 2	180°/sec
	Axis 3	148°/sec
	Axis 4	222°/sec
	Axis 5	222°/sec
	Axis 6	222°/sec
Weight		≈700kg
Mounting type		Ground, bracket, ceiling
Ambient temperature		5°C ~ 45°C



Main Applications

Materials Handling | Parts Transmission | Stacking | deburring | cutting

Application Case

Drilling and deburring of irregular workpieces

SZGH-T2300-3C-6 is a 30kg manipulator newly developed by our company, with high body rigidity and certain load redundancy.
The picture on the right shows the integrated polishing and perforation scheme provided by the company for a customer, which greatly considers the variety of products on the customer's site.

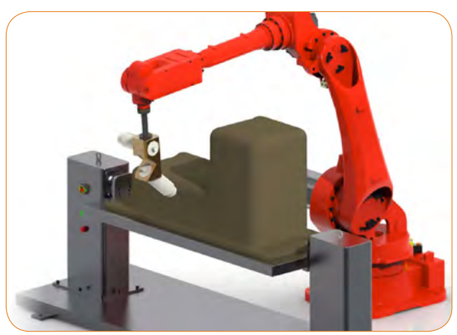

Robot Motion Range

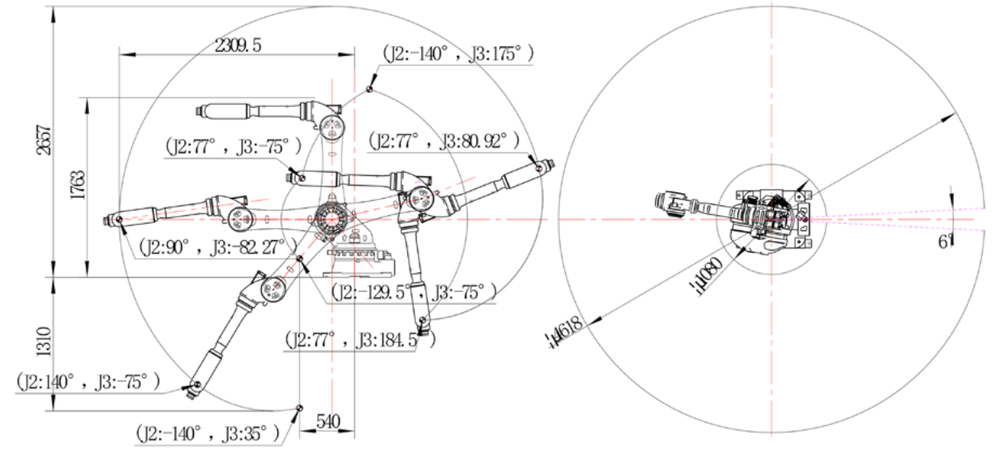

Robot Flange Connection

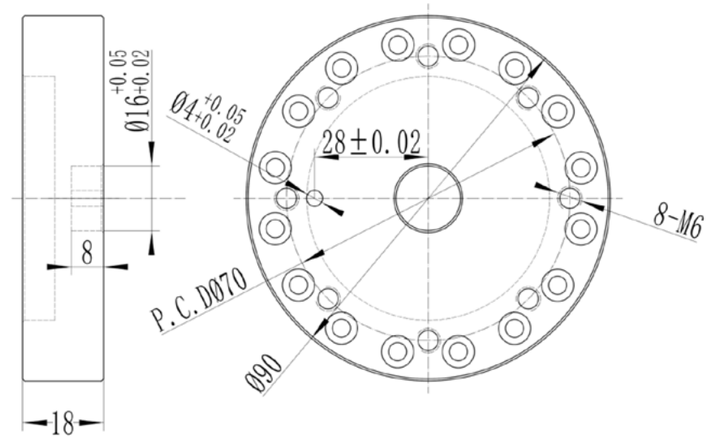

Robot Base Installation

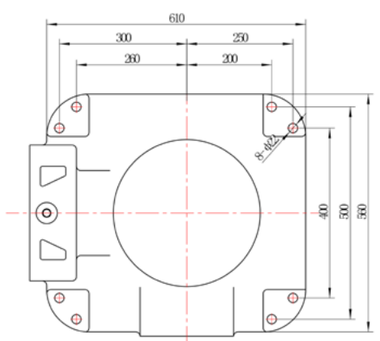

SZGH-T2950-3C-6

Payload		30kg
Reach		2950mm
Structure		Articulated
Number of axes		6
Repeatability		±0.15mm
Max. motion range	Axis 1	±175°
	Axis 2	+100°/-70°
	Axis 3	+60°/-75°
	Axis 4	±150°
	Axis 5	+30°/-240°
	Axis 6	±360°
Max. speed	Axis 1	60°/sec
	Axis 2	180°/sec
	Axis 3	148°/sec
	Axis 4	222°/sec
	Axis 5	222°/sec
	Axis 6	222°/sec
Weight		≈700kg
Mounting type		Ground, bracket, ceiling
Ambient temperature		5°C ~ 45°C



Main Applications

Materials Handling | Parts Transmission | Stacking | deburring | cutting

Application Case

Drilling and deburring of irregular workpieces

SZGH-T2950-3C-6 is a 30kg manipulator newly developed by our company, with a large range of motion.
The picture on the right is the scene picture provided by the company for a customer of large-scale injection molding parts, which can fully meet the production rhythm and process requirements of large-scale injection molding machines.



SZGH-T General-purpose Series
SZGH-M Grinding Series
SZGH-B Handling Series
SZGH-P Painting Series
SZGH-H Welding Series
SZGH-S Scara Robots
SZGH-Arm Four-axis cooperative Robots
Positioners
Robot walking slide rail
Control System
Application display and technical support

Robot Motion Range

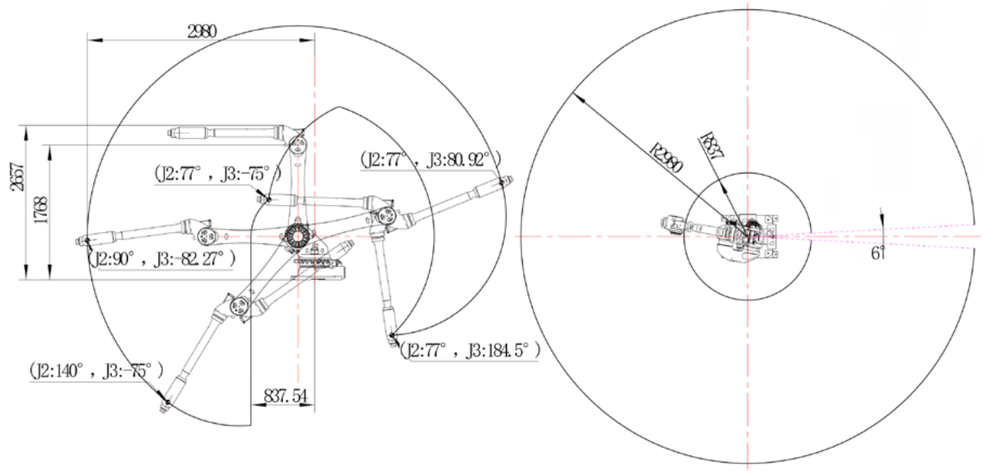

Robot Flange Connection

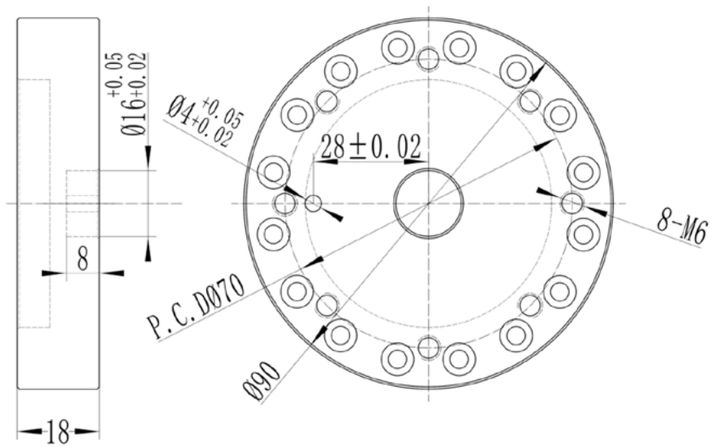

Robot Base Installation

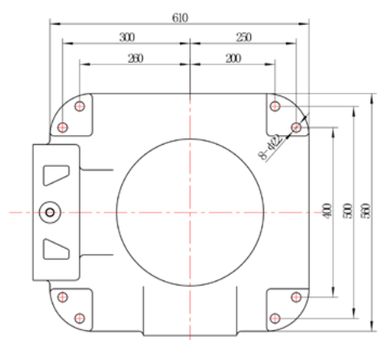

SZGH-T General-purpose Series
SZGH-M Grinding Series
SZGH-B Handling Series
SZGH-P Painting Series
SZGH-H Welding Series
SZGH-S Scara Robots
SZGH-Arm Four-axis cooperative Robots
Positioners
Robot walking slide rail
Control System
Application display and technical support

SZGH-M1000-E-6

Payload		50kg
Reach		1000mm
Structure		Articulated
Number of axes		6
Repeatability		±0.08mm
Max. motion range	Axis 1	±165°
	Axis 2	+128°/-63°
	Axis 3	+60°/-75°
	Axis 4	±130°
	Axis 5	+80°/-220°
	Axis 6	±360°
Max. speed	Axis 1	148°/sec
	Axis 2	148°/sec
	Axis 3	148°/sec
	Axis 4	222°/sec
	Axis 5	148°/sec
	Axis 6	148°/sec
Weight		≈180kg
Mounting type		Ground, bracket, ceiling
Ambient temperature		5°C ~ 45°C



Main Applications

Grinding | Polishing | Deburring

Application Case

Drilling and deburring of irregular workpieces

SZGH-M1000-E-6 is a 50kg manipulator newly developed by our company, with a large range of motion.
The right figure shows a case of spherical grinding of this machine provided by our company for a customer. The machine has a built-in grinding process package, which can easily complete the grinding task delivered by the customer.

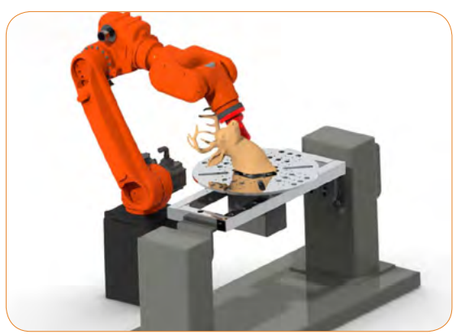

Robot Motion Range

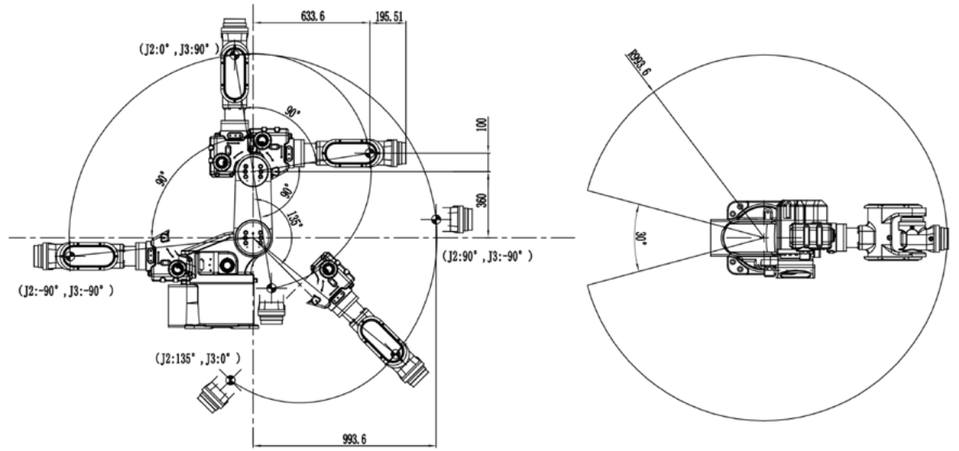

Robot Flange Connection

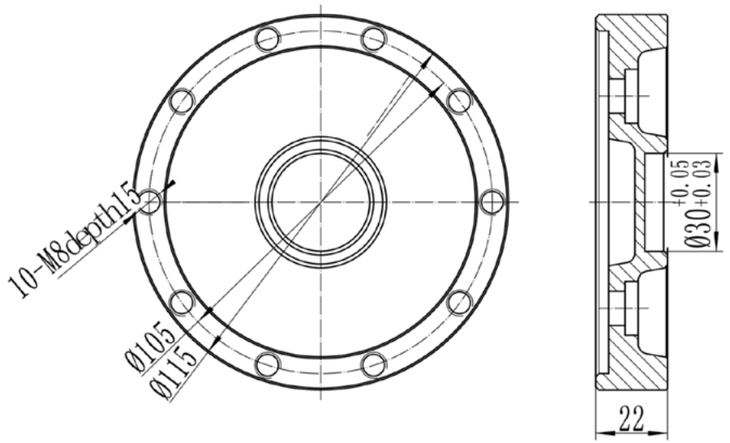

Robot Base Installation

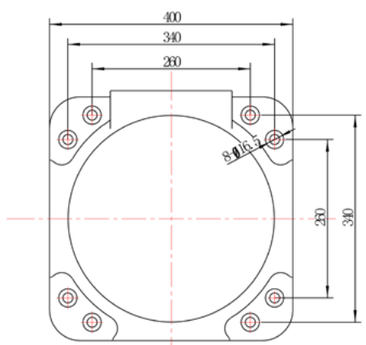

SZGH-M1400-3C-6

Payload		30kg
Reach		1400mm
Structure		Articulated
Number of axes		6
Repeatability		±0.08mm
Max. motion range	Axis 1	±170°
	Axis 2	+120°/-70°
	Axis 3	+60°/-75°
	Axis 4	±150°
	Axis 5	+80°/-220°
	Axis 6	±360°
Max. speed	Axis 1	148°/sec
	Axis 2	148°/sec
	Axis 3	148°/sec
	Axis 4	222°/sec
	Axis 5	222°/sec
	Axis 6	148°/sec
Weight		≈185kg
Mounting type		Ground, bracket, ceiling
Ambient temperature		5°C ~ 45°C



Main Applications

Grinding Polishing Deburring

Application Case

Drilling and deburring of irregular workpieces

SZGH-M1400-E-6 is a 30kg manipulator newly developed by our company, with a large range of motion.
The right figure shows a case of spherical grinding of this machine provided by our company for a customer. The machine has a built-in grinding process package, which can easily complete the grinding task delivered by the customer.



Robot Motion Range

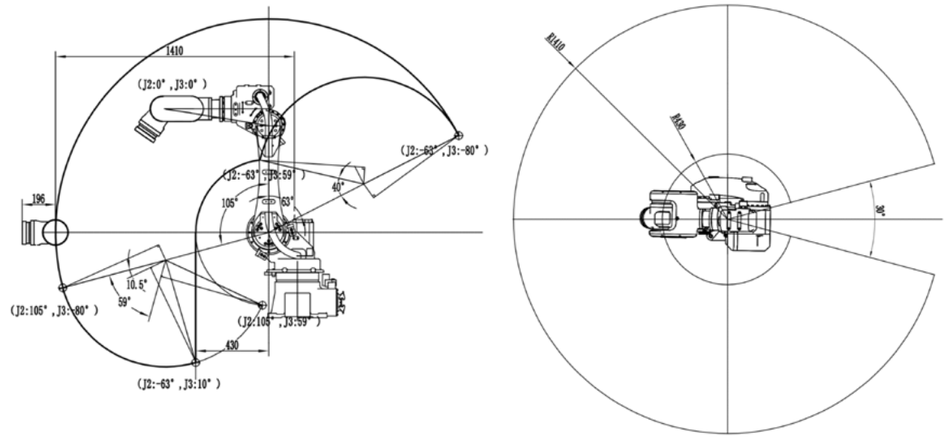

Robot Flange Connection

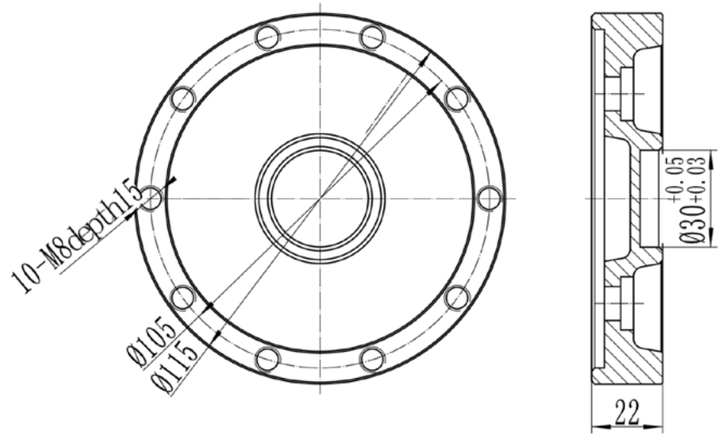

Robot Base Installation

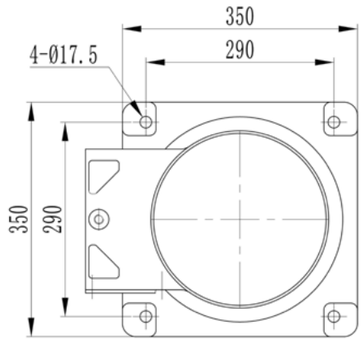

SZGH-M1850-3C-6

Payload		30kg
Reach		1850mm
Structure		Articulated
Number of axes		6
Repeatability		±0.08mm
Max. motion range	Axis 1	±170°
	Axis 2	+120°/-63°
	Axis 3	+60°/-85°
	Axis 4	±360°
	Axis 5	+80°/-220°
	Axis 6	±360°
Max. speed	Axis 1	148°/sec
	Axis 2	148°/sec
	Axis 3	148°/sec
	Axis 4	222°/sec
	Axis 5	222°/sec
	Axis 6	148°/sec
Weight		≈270kg
Mounting type		Ground, bracket, ceiling
Ambient temperature		5°C ~ 45°C



Main Applications

Grinding Polishing Deburring

Application Case

Drilling and deburring of irregular workpieces

SZGH-M1850-E-6 is a 30kg manipulator newly developed by our company, with a large range of motion.
The right figure shows a case of spherical grinding of this machine provided by our company for a customer. The machine has a built-in grinding process package, which can easily complete the grinding task delivered by the customer.

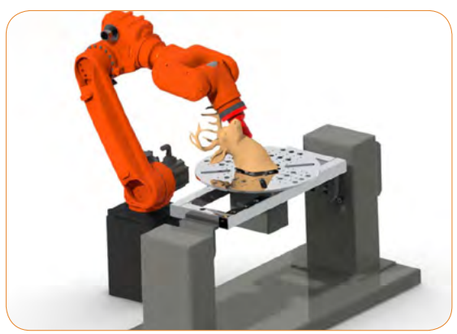

Robot Motion Range

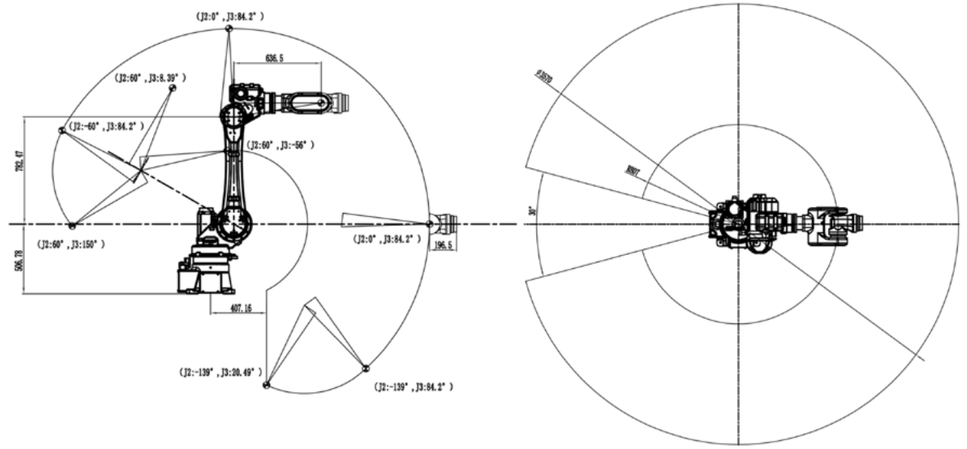

Robot Flange Connection

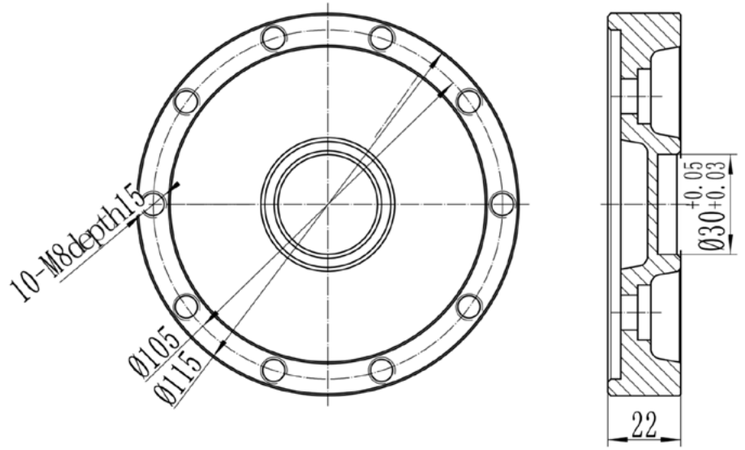

Robot Base Installation

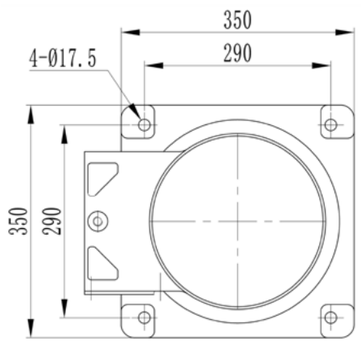

SZGH-G1000-B-4

Payload		6kg
Reach		1000mm
Structure		Articulated
Number of axes		4
Repeatability		±0.2mm
Max. motion range	Axis 1	±165°
	Axis 2	+80°/-35°
	Axis 3	+80°/-35°
	Axis 4	±360°
	Axis 5	———
	Axis 6	
Max. speed	Axis 1	148°/sec
	Axis 2	148°/sec
	Axis 3	222°/sec
	Axis 4	360°/sec
	Axis 5	———
	Axis 6	———
Weight		≈60KG
Mounting type		Ground, bracket, ceiling
Ambient temperature		5°C ~ 45°C



Main Applications

Materials Handling | Parts transmission | Machine Management | Stacking | Packaging

Application Case

Loading and unloading of small stamping parts

SZGH-G1000-B-4 is a 6kg light manipulator newly developed by our company, with a large range of motion. The picture on the right is the on-site feeding and unloading picture of the machine in the stamping workshop provided by the company for a customer. Due to its light structure and fast speed, it is fully capable of meeting the rhythm and process requirements of ordinary stamping machines.



Robot Motion Range

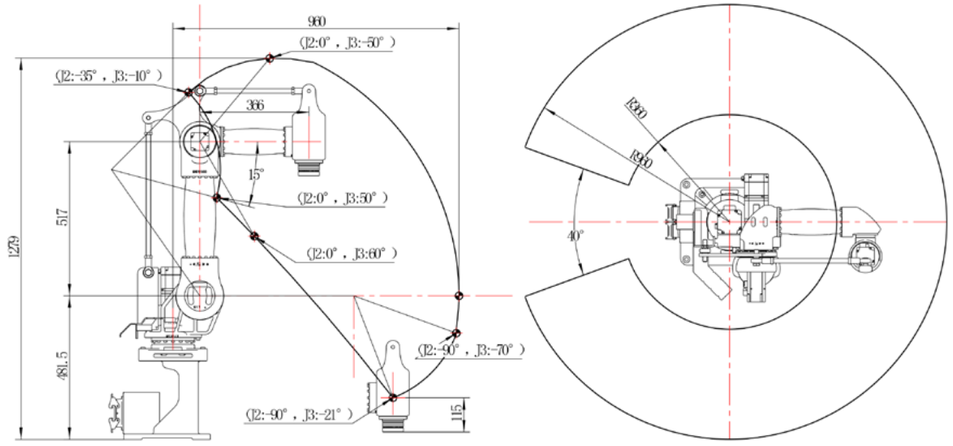

Robot Flange Connection

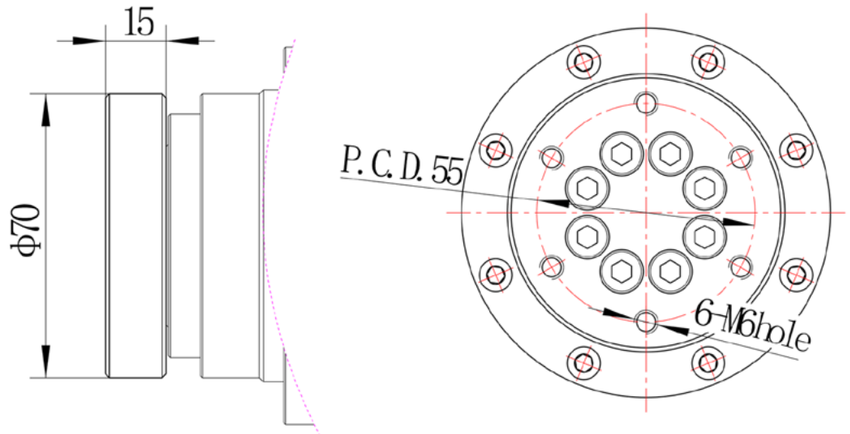

Robot Base Installation

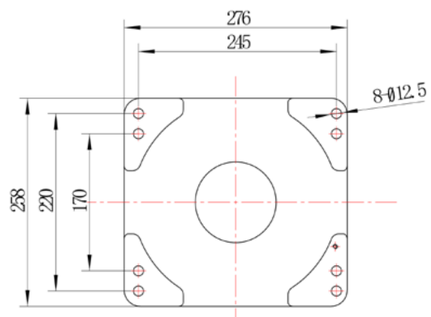

SZGH-B1500-C-4

Payload		10kg
Reach		1500mm
Structure		Articulated
Number of axes		4
Repeatability		±0.2mm
Max. motion range	Axis 1	±165°
	Axis 2	+80°/-25°
	Axis 3	+80°/-25°
	Axis 4	±360°
	Axis 5	------
	Axis 6	------
Max. speed	Axis 1	148°/sec
	Axis 2	148°/sec
	Axis 3	148°/sec
	Axis 4	222°/sec
	Axis 5	------
	Axis 6	------
Weight		≈140KG
Mounting type		Horizontal
Ambient temperature		5°C ~ 45°C



Main Applications

Materials Handling | Parts transmission | Stacking | Deburring | Cutting

Application Case

Loading and unloading for stamping

SZGH-B1500-C-4 robot has a load of 10kg and is mainly used for assembly line stamping.The picture shows the working site of the punching line provided by our company for a customer. This type of robot can carry out loading and unloading in a large range in a small environment, greatly improving the production efficiency.



Robot Motion Range

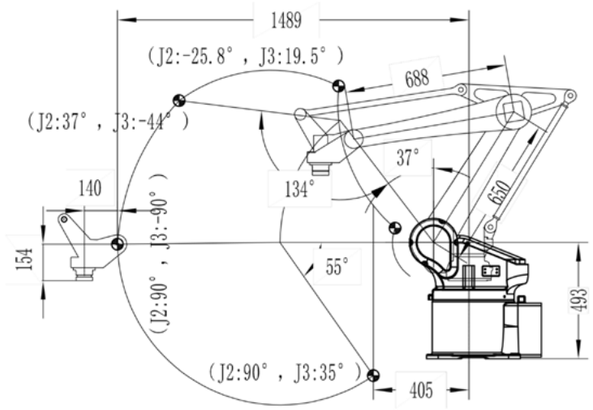

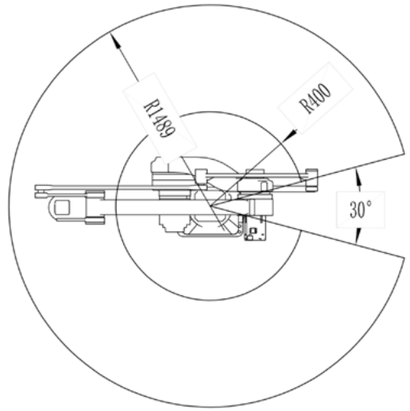

Robot Flange Connection

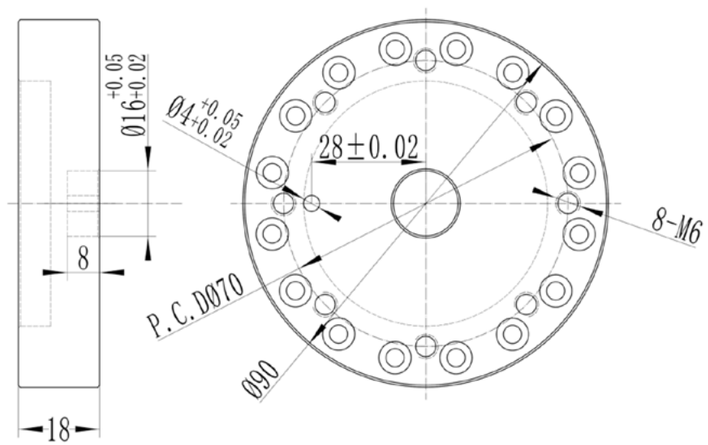

Robot Base Installation

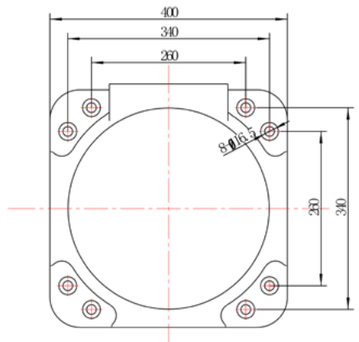

SZGH-B1850-3C-4

Payload		30kg
Reach		1850mm
Structure		Articulated
Number of axes		4
Repeatability		±0.2mm
Max. motion range	Axis 1	±170°
	Axis 2	+80°/-25°
	Axis 3	+80°/-25°
	Axis 4	±360°
	Axis 5	------
	Axis 6	------
Max. speed	Axis 1	148°/sec
	Axis 2	148°/sec
	Axis 3	148°/sec
	Axis 4	222°/sec
	Axis 5	------
	Axis 6	------
Weight		≈230KG
Mounting type		Horizontal
Ambient temperature		5°C ~ 45°C



Main Applications

Materials Handling | Parts transmission | Stacking | Deburring | Cutting

Application Case

Loading and unloading on the assembly line

SZGH-B1850-3C-4 robot has a load of 30kg, which can be used for loading and unloading of a single press, or for loading and unloading of multiple presses to realize the assembly line stamping operation.The picture on the right shows our company providing an assembly line stacking solution for a customer. The size of the customer's card is 1.1m × 1.1m, the required stacking height is 1.6m, and one robot can stack two pallets at the same time, greatly improving the efficiency of flow production and saving labor.



Robot Motion Range

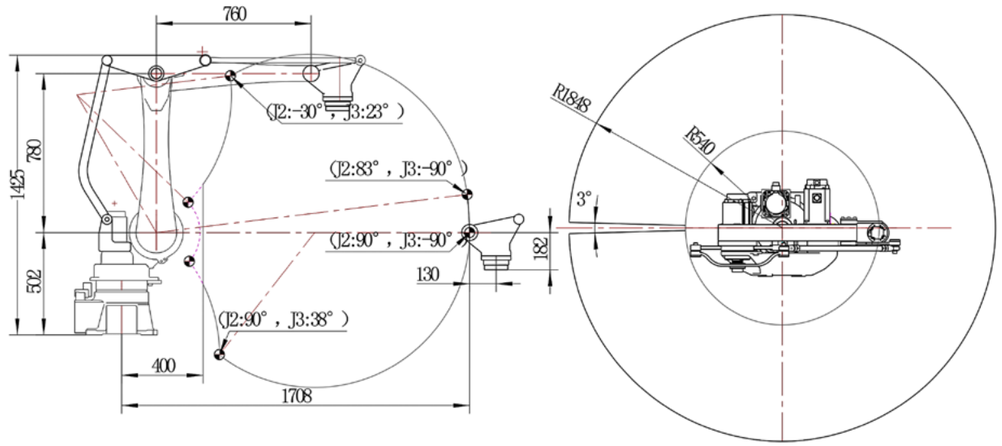

Robot Flange Connection

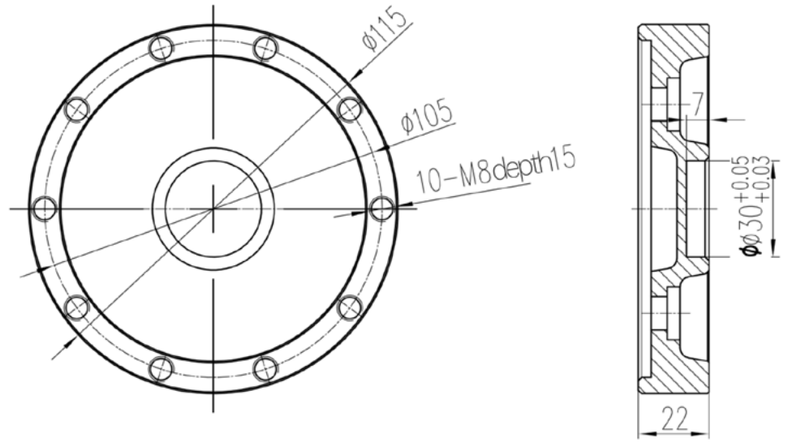

Robot Base Installation

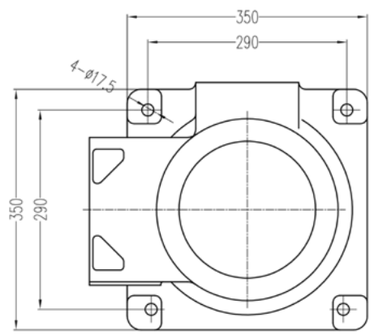

SZGH-B2100-F-4

Payload		100kg
Reach		2100mm
Structure		Articulated
Number of axes		4
Repeatability		±0.2mm
Max. motion range	Axis 1	±175°
	Axis 2	+80°/-25°
	Axis 3	+80°/-25°
	Axis 4	±360°
	Axis 5	------
	Axis 6	------
Max. speed	Axis 1	60°/sec
	Axis 2	148°/sec
	Axis 3	148°/sec
	Axis 4	148°/sec
	Axis 5	------
	Axis 6	------
Weight		≈650kg
Mounting type		Horizontal
Ambient temperature		5°C ~ 45°C



Main Applications

Materials Handling | Parts transmission | Stacking | Deburring | Cutting

Application Case

Palletizing of materials in bags

SZGH-B2100-F-4 robot has a load of 100kg. It is a heavy-duty palletizing robot, which is widely used in various chemical loading and unloading, assembly line palletizing and other occasions. The picture shows the scene of the chemical raw material feeding assembly line provided by the company for a customer. A robot is responsible for the whole assembly line, freeing workers from heavy work and solving the problem of recruitment at this position of the enterprise.



Robot Motion Range

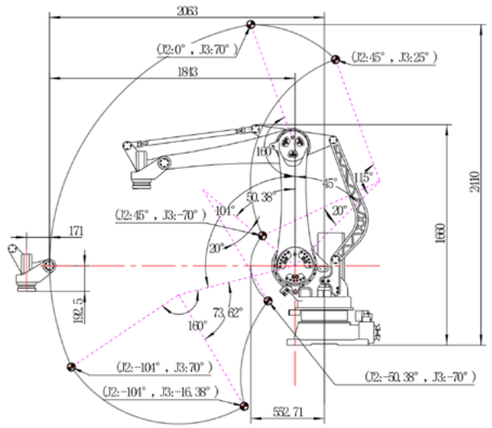

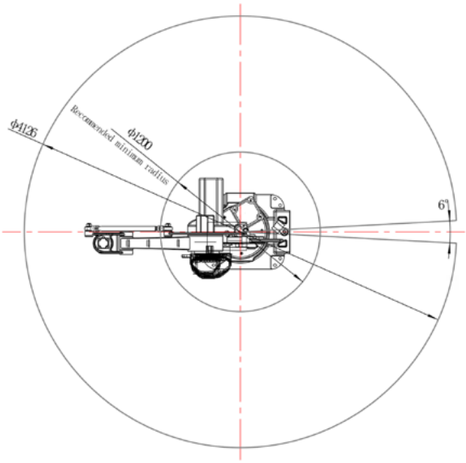

Robot Flange Connection

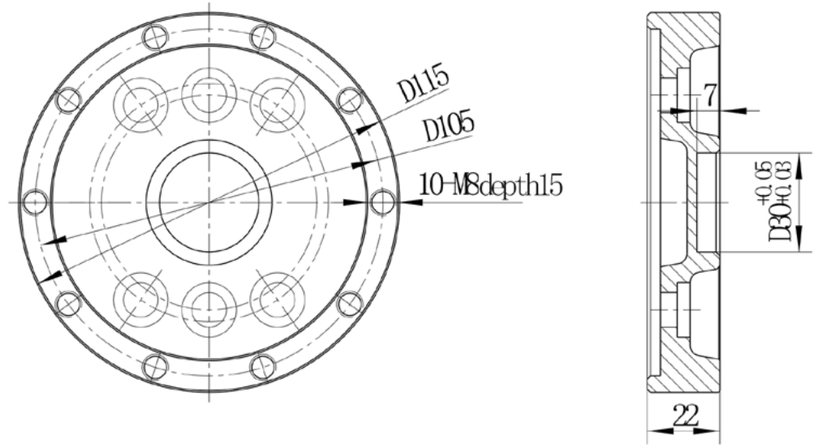

Robot Base Installation

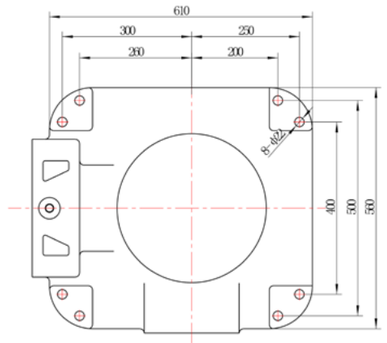

SZGH-B2300-E-4

Payload		50kg
Reach		2300mm
Structure		Articulated
Number of axes		4
Repeatability		±0.2mm
Max. motion range	Axis 1	±175°
	Axis 2	+80°/-25°
	Axis 3	+80°/-25°
	Axis 4	±360°
	Axis 5	------
	Axis 6	------
Max. speed	Axis 1	60°/sec
	Axis 2	148°/sec
	Axis 3	148°/sec
	Axis 4	148°/sec
	Axis 5	------
	Axis 6	------
Weight		≈660kg
Mounting type		Horizontal
Ambient temperature		5°C ~ 45°C



Main Applications

Materials Handling | Parts transmission | Stacking | Deburring | Cutting

Application Case

Palletizing of materials in bags

SZGH-B2300-E-4 robot with a 50 kg payload is a medium-duty palletizing robot. Compared with other robots, this robot has a moderate payload and has certain advantages in palletizing height and scope. The figure shows the diagram of the box packaging line handling &palletizing scheme provided for a customer. It can realize handling and palletizing of packaging boxes of medium weight.



SZGH-T General-purpose Series
SZGH-M Grinding Series
SZGH-B Handling Series
SZGH-P Painting Series
SZGH-H Welding Series
SZGH-S Scara Robots
SZGH-Arm Four-axis cooperative Robots
Positioners
Robot walking slide rail
Control System
Application display and technical support

Robot Motion Range

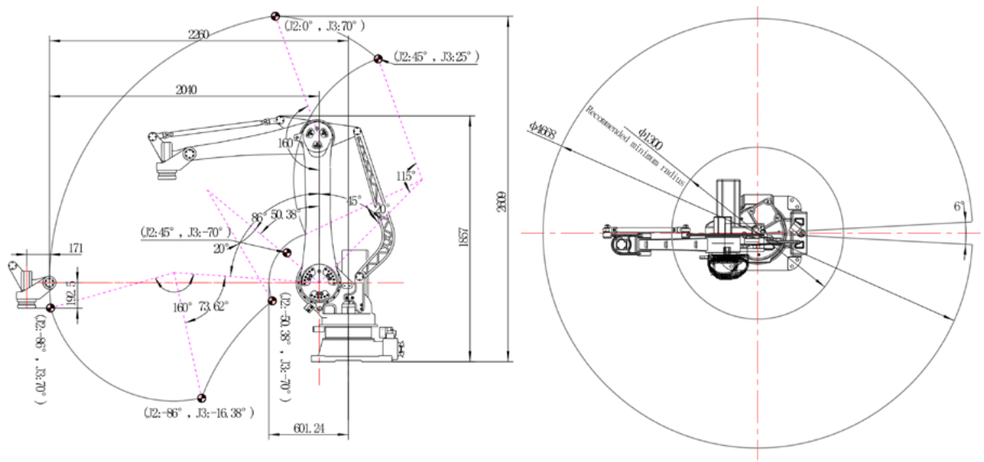

Robot Flange Connection

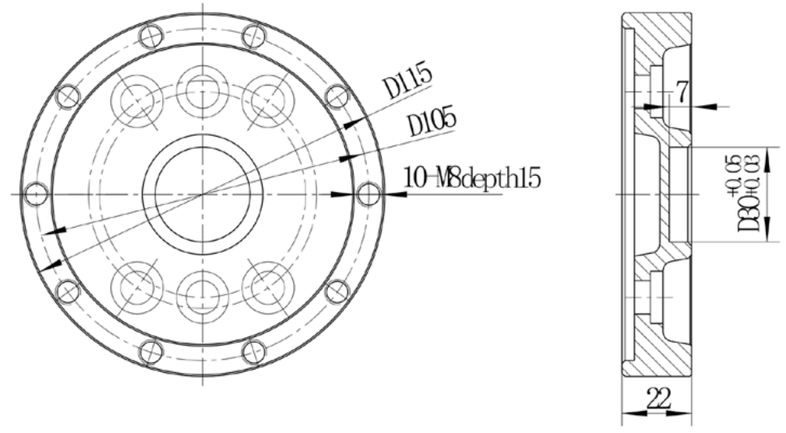

Robot Base Installation

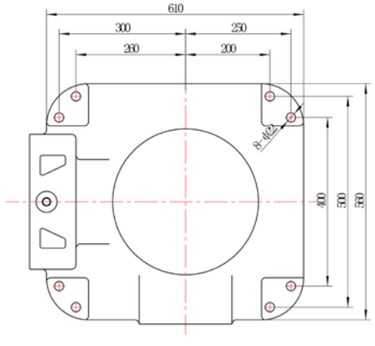

SZGH-T General-purpose Series
SZGH-M Grinding Series
SZGH-B Handling Series
SZGH-P Painting Series
SZGH-H Welding Series
SZGH-S Scara Robots
SZGH-Arm Four-axis cooperative Robots
Positioners
Robot walking slide rail
Control System
Application display and technical support

SZGH-B3100-G-4

Payload		165kg
Reach		3100mm
Structure		Articulated
Number of axes		4
Repeatability		±0.2mm
Max. motion range	Axis 1	±175°
	Axis 2	+80°/-25°
	Axis 3	+80°/-25°
	Axis 4	±360°
	Axis 5	------
	Axis 6	------
Max. speed	Axis 1	60°/sec
	Axis 2	148°/sec
	Axis 3	148°/sec
	Axis 4	148°/sec
	Axis 5	------
	Axis 6	------
Weight		≈1600KG
Mounting type		Ground, bracket, ceiling
Ambient temperature		5°C ~ 45°C



Main Applications

Materials Handling | Parts Transfer | Stacking

Application Case

Unloading of cast aluminum ingots

SZGH-B3100-G-4 robot with a 165 kg payload is a heavy-duty palletizing robot widely used in casting shops, production line palletizing and various other applications. The figure shows the loading and unloading equipment provided for an industrial aluminum ingot casting shop. This equipment significantly enhances production efficiency of the company and solves the problem of difficulty in employment for dangerous and strenuous posts facing the enterprise.



SZGH-T General-purpose Series
SZGH-M Grinding Series
SZGH-B Handling Series
SZGH-P Painting Series
SZGH-H Welding Series
SZGH-S Scara Robots
SZGH-Arm Four-axis cooperative Robots
Positioners
Robot walking slide rail
Control System
Application display and technical support

Robot Motion Range

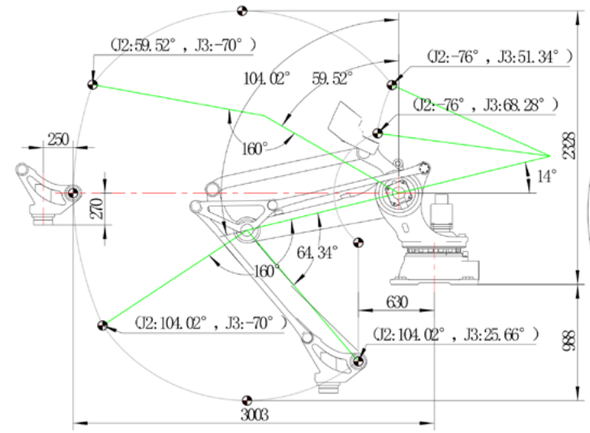

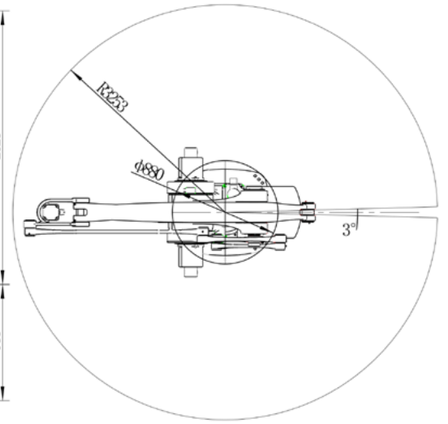

Robot Flange Connection

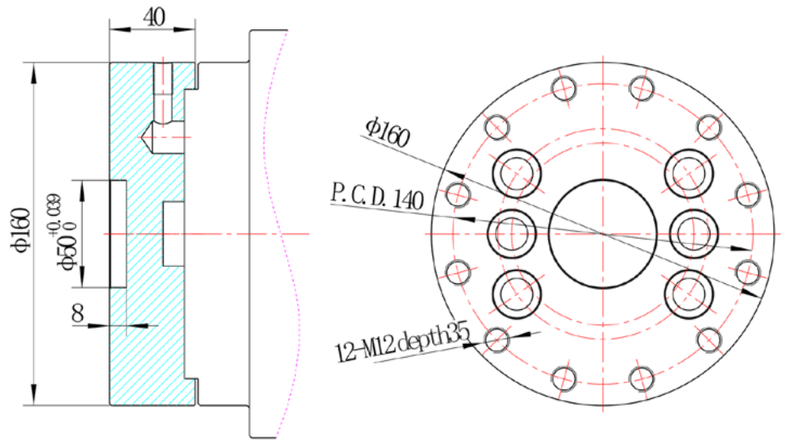

Robot Base Installation

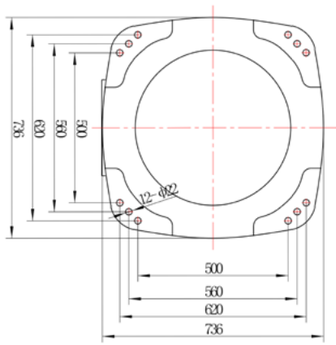

SZGH-T General-purpose Series
SZGH-M Grinding Series
SZGH-B Handling Series
SZGH-P Painting Series
SZGH-H Welding Series
SZGH-S Scara Robots
SZGH-Arm Four-axis cooperative Robots
Positioners
Robot walking slide rail
Control System
Application display and technical support

SZGH-P1500-B-6

Payload		6KG
Reach		1500mm
Structure		Articulated
Number of axes		6
Repeatability		±0.05mm
Max. motion range	Axis 1	±165°
	Axis 2	+120°/-70°
	Axis 3	+60°/-75°
	Axis 4	±150°
	Axis 5	+30°/-240°
	Axis 6	±360°
Max. speed	Axis 1	148°/sec
	Axis 2	148°/sec
	Axis 3	148°/sec
	Axis 4	222°/sec
	Axis 5	222°/sec
	Axis 6	360°/sec
Weight		≈150kg
Mounting type		Ground, bracket, ceiling
Ambient temperature		5℃ ~ 45℃



Main Applications

Painting

Application Case

Hanging line tracking and painting

SZGH-P1500-B-6 is the earliest painting robot launched by the company. With a payload of 6 kg and a reach of 1500 mm, it is generally integrated with various non-standard turntables or hanging equipment to form work stations. The figure shows the hanging line tracking and painting solution provided for a customer. It not only significantly reduces labor cost but also improves the yield.

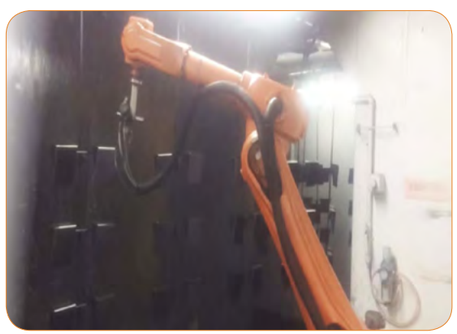

Robot Motion Range

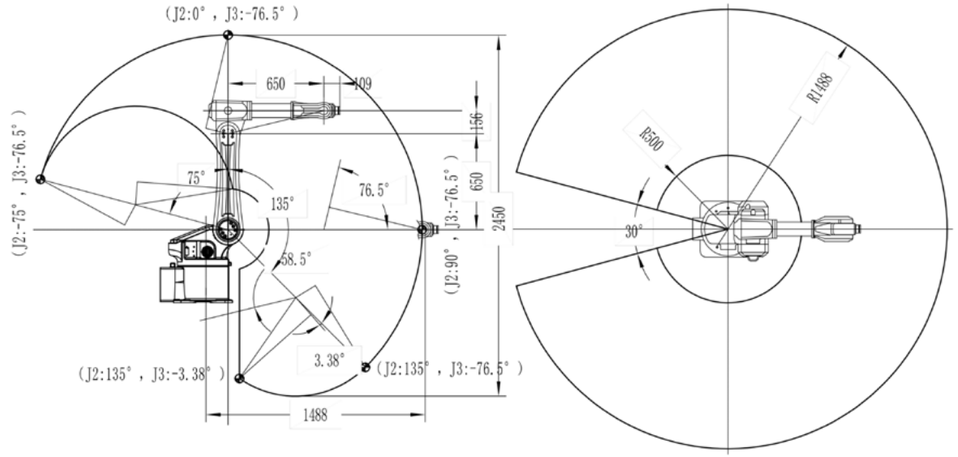

Robot Flange Connection

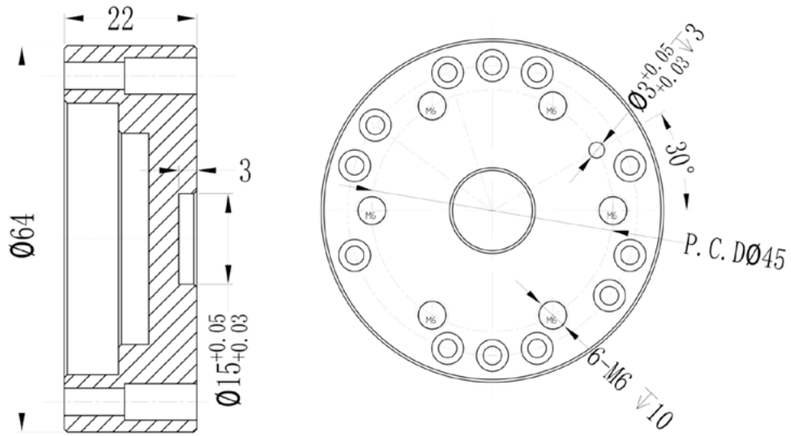

Robot Base Installation

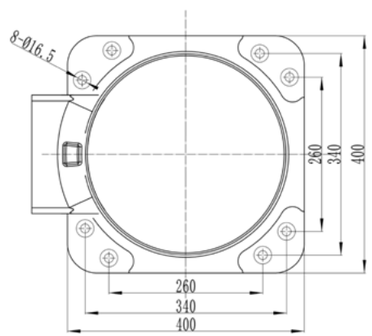

SZGH-P1950-B-6

Payload		6KG
Reach		1950mm
Structure		Articulated
Number of axes		6
Repeatability		±0.08mm
Max. motion range	Axis 1	±165°
	Axis 2	+135°/-70°
	Axis 3	+60°/-75°
	Axis 4	±150°
	Axis 5	+30°/-240°
	Axis 6	±360°
Max. speed	Axis 1	148°/sec
	Axis 2	148°/sec
	Axis 3	148°/sec
	Axis 4	222°/sec
	Axis 5	222°/sec
	Axis 6	360°/sec
Weight		≈170kg
Mounting type		Ground, bracket, ceiling
Ambient temperature		5°C ~ 45°C



Main Applications

Painting

Application Case

Rotary painting of injection molded parts

SZGH-P1950-B-6 is a painting robot produced by company. Featuring dust-proof, waterproof and certain advantages in motion range, it is generally used in applications with adverse painting environment and helps improve the employment and working environment of an enterprise significantly.



Robot Motion Range

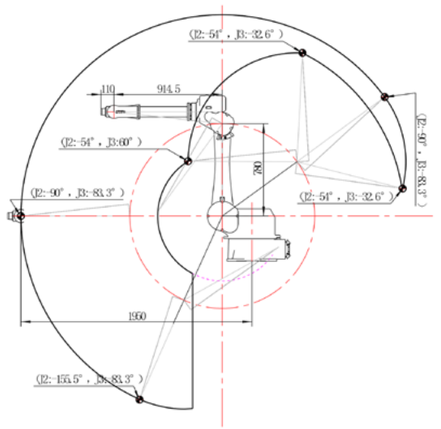

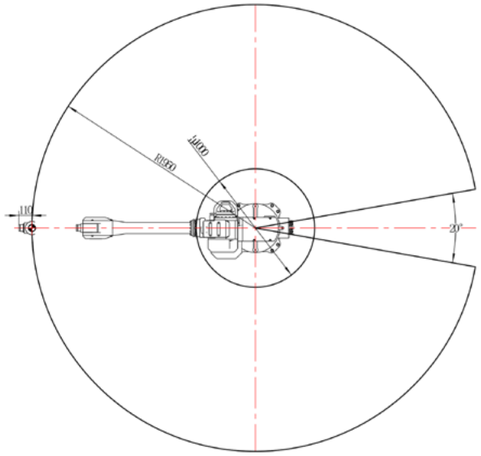

Robot Flange Connection

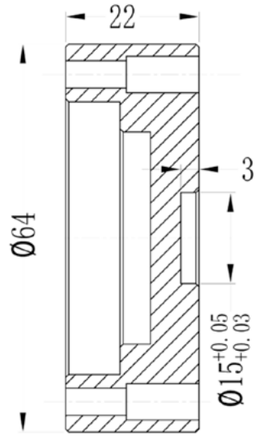

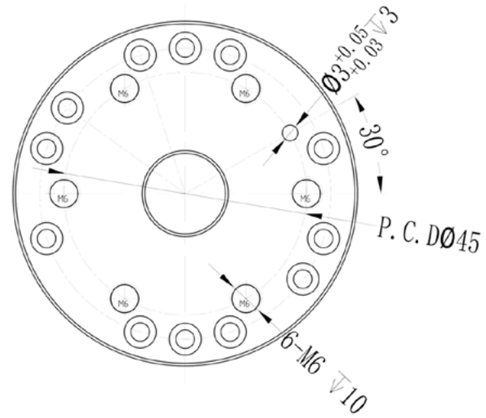

Robot Base Installation

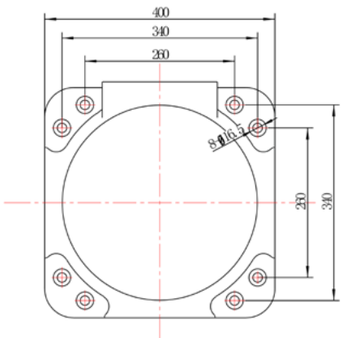

SZGH-H1500-B-6

Payload		6KG
Reach		1500mm
Structure		Articulated
Number of axes		6
Repeatability		±0.05mm
Max. motion range	Axis 1	±165°
	Axis 2	+135°/-70°
	Axis 3	+85°/-85°
	Axis 4	±150°
	Axis 5	+30°/-240°
	Axis 6	±360°
Max. speed	Axis 1	148°/sec
	Axis 2	148°/sec
	Axis 3	148°/sec
	Axis 4	222°/sec
	Axis 5	222°/sec
	Axis 6	360°/sec
Weight		≈150kg
Mounting type		Ground, bracket, ceiling
Ambient temperature		5℃ ~ 45℃



Main Applications

Automobile | Metal doors &windows | Engineering Machinery | Mining Machinery | Locomotives | Electrical Appliances | Furniture and Other industries

Application Case

Welding station with a positioner

SZGH-H1500-B-6 robot is dedicated to welding. It is a robot developed for more adverse field environment of the customers based on the existing LH1850-B-6 robot. Compared with the previous model, this product has a higher floor space and stabler construction; moreover, there is a fully enclosed axis to effectively prevent welding spatters from damaging cables of the robot.

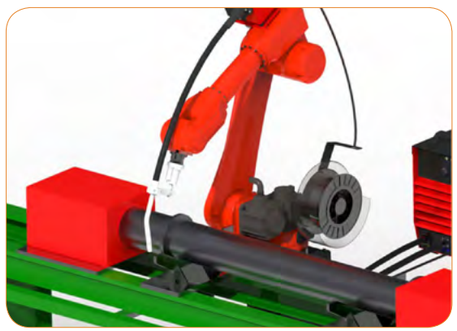

Robot Motion Range

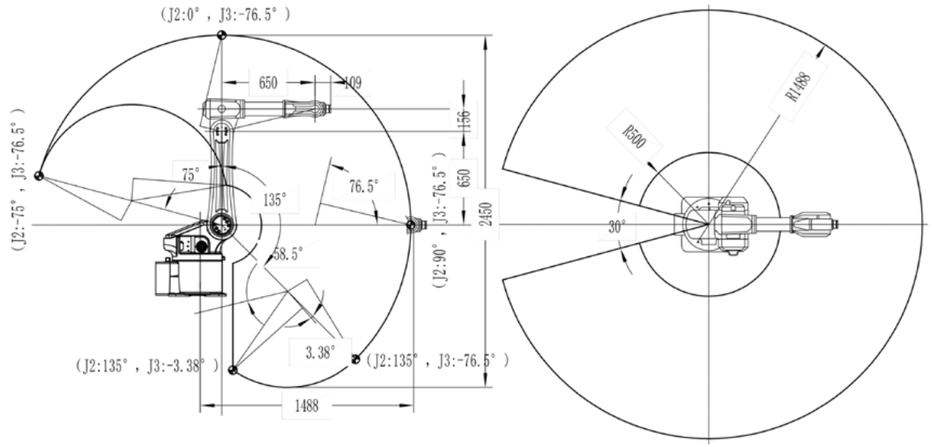

Robot Flange Connection

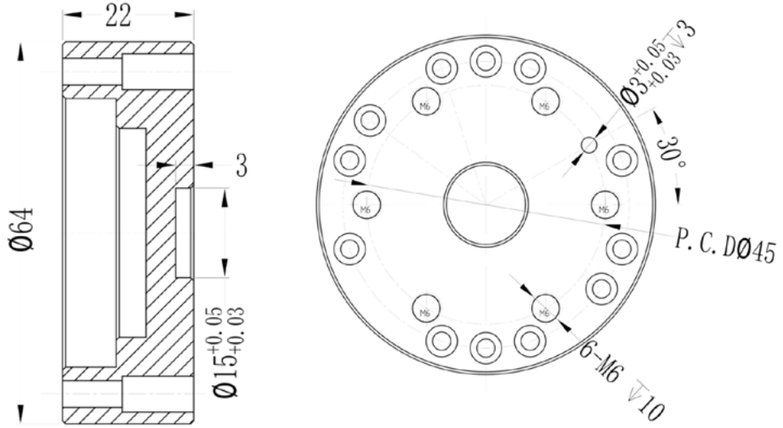

Robot Base Installation

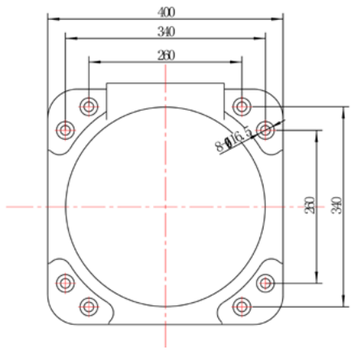

SZGH-H2100-B-6

Payload		6KG
Reach		2100mm
Structure		Articulated
Number of axes		6
Repeatability		±0.05mm
Max. motion range	Axis 1	±165°
	Axis 2	+135°/-70°
	Axis 3	+85°/-85°
	Axis 4	±150°
	Axis 5	+30°/-240°
	Axis 6	±360°
Max. speed	Axis 1	148°/sec
	Axis 2	148°/sec
	Axis 3	148°/sec
	Axis 4	222°/sec
	Axis 5	222°/sec
	Axis 6	360°/sec
Weight		≈235kg
Mounting type		Ground, bracket, ceiling
Ambient temperature		5℃ ~ 45℃



Main Applications

Automobile | Metal doors &windows | Engineering Machinery | Mining Machinery | Locomotives | Electrical Appliances | Furniture and Other industries

Application Case

Welding of overweight box structure

SZGH-H2100-B-6 robot is specially used in the welding field. It is a robot developed by the company based on the existing lH1850-B-6 for the worse on-site environment of customers. Compared with the previous products, this product has a larger installation area and a stable structure, as well as a shaft full sealing structure, which effectively prevents the damage of some welding slag to the robot wire.



Robot Motion Range

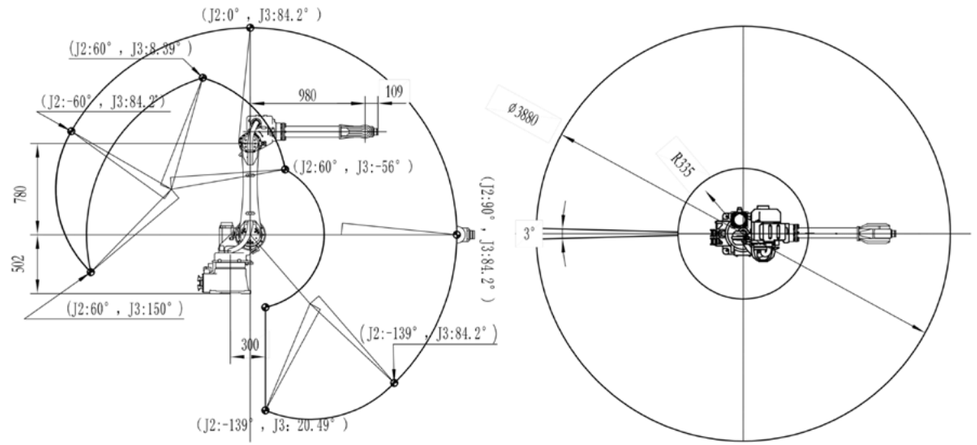

Robot Flange Connection

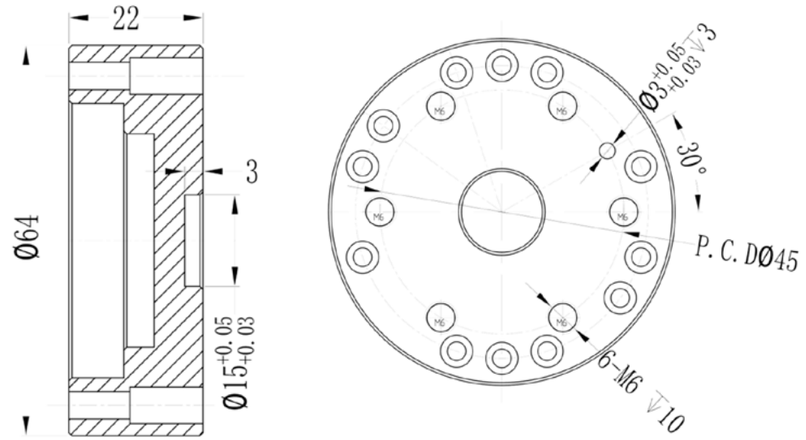

Robot Base Installation

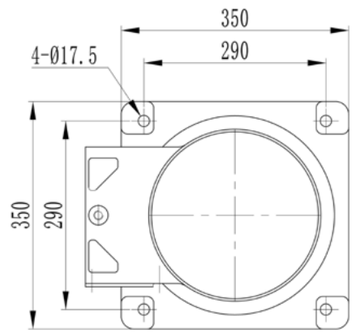

SZGH-HZ1500-B-6

Payload		6KG
Reach		1500mm
Structure		Articulated
Number of axes		6
Repeatability		±0.08mm
Max. motion range	Axis 1	±165°
	Axis 2	+135°/-70°
	Axis 3	+85°/-85°
	Axis 4	±150°
	Axis 5	+30°/-240°
	Axis 6	±360°
Max. speed	Axis 1	148°/sec
	Axis 2	148°/sec
	Axis 3	148°/sec
	Axis 4	222°/sec
	Axis 5	222°/sec
	Axis 6	360°/sec
Weight		≈150kg
Mounting type		Ground, bracket, ceiling
Ambient temperature		5℃~45℃



Main Applications

Automobile | Metal doors &windows | Engineering Machinery | Mining Machinery | Locomotives | Electrical Appliances | Furniture and Other industries

Application Case

Welding station with a positioner

SZGH-HZ1500-B-6 robot is dedicated to welding. It is a robot developed for more adverse field environment of the customers. This product has a higher floor space and stabler construction than ever and there is a fully enclosed axis to effectively prevent welding spatters from damaging cables of the robot.

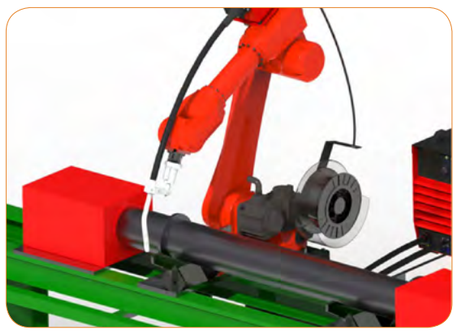

Robot Motion Range

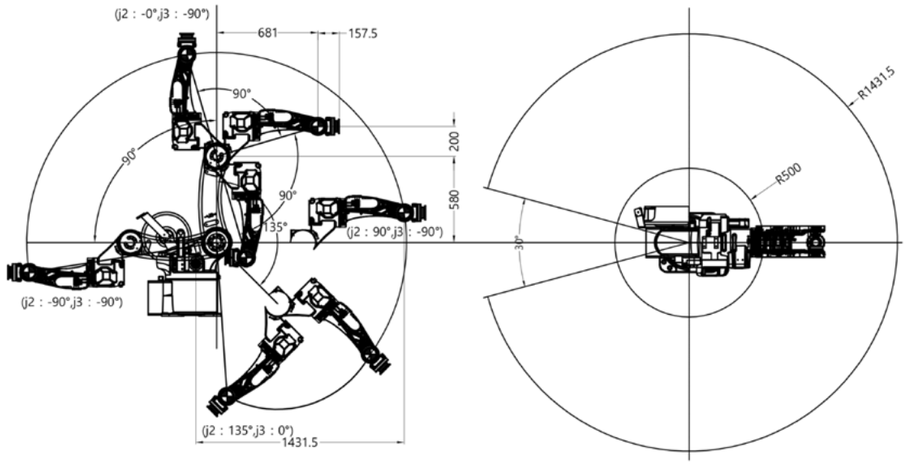

Robot Flange Connection

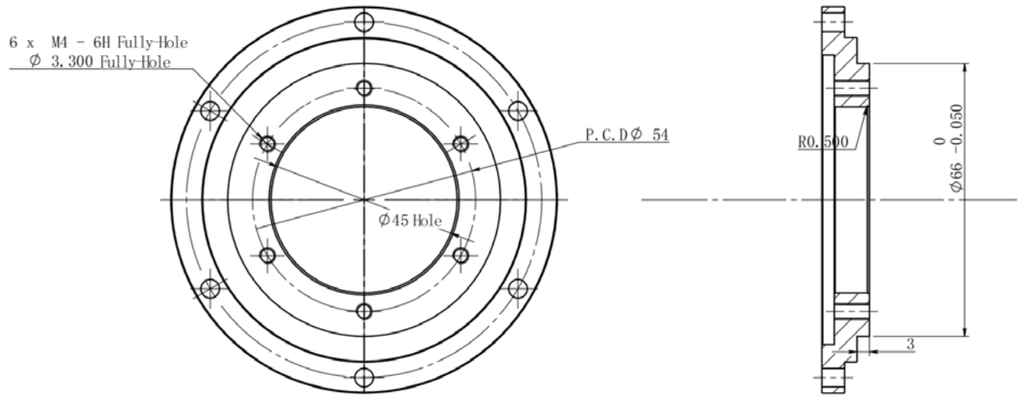

Robot Base Installation

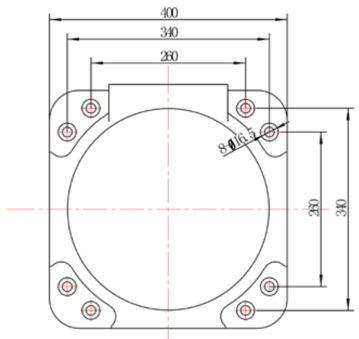

SZGH-HZ2000-B-6

Payload		6KG
Reach		2000mm
Structure		Articulated
Number of axes		6
Repeatability		±0.08mm
Max. motion range	Axis 1	±165°
	Axis 2	+135°/-70°
	Axis 3	+85°/-85°
	Axis 4	±150°
	Axis 5	+30°/-240°
	Axis 6	±360°
Max. speed	Axis 1	148°/sec
	Axis 2	148°/sec
	Axis 3	148°/sec
	Axis 4	222°/sec
	Axis 5	222°/sec
	Axis 6	360°/sec
Weight		≈170kg
Mounting type		Ground, bracket, ceiling
Ambient temperature		5℃ ~ 45℃



Main Applications

Automobile | Metal doors &windows | Engineering Machinery | Mining Machinery | Locomotives | Electrical Appliances | Furniture and Other industries

Application Case

Welding station with a positioner

SZGH-HZ2000-B-6 robot is dedicated to welding. It is a robot developed for more adverse field environment of the customers. This product has a higher floor space and stabler construction than ever and there is a fully enclosed axis to effectively prevent welding spatters from damaging cables of the robot.



SZGH-T General-purpose Series
SZGH-M Grinding Series
SZGH-B Handling Series
SZGH-P Painting Series
SZGH-H Welding Series
SZGH-S Scara Robots
SZGH-Arm Four-axis cooperative Robots
Positioners
Robot walking slide rail
Control System
Application display and technical support

Robot Motion Range

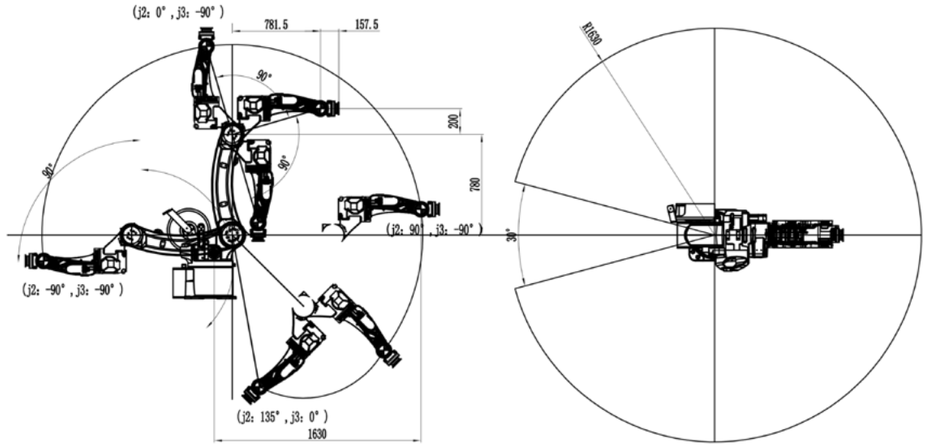

Robot Flange Connection

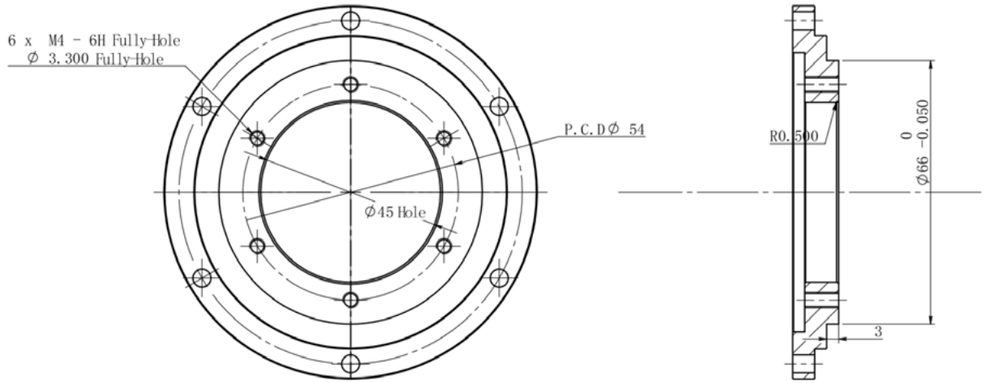

Robot Base Installation

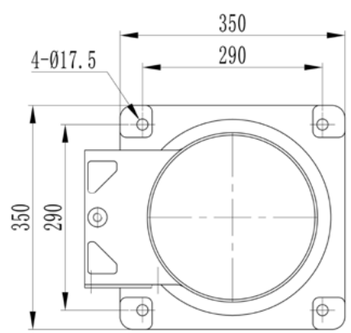

SZGH-T General-purpose Series
SZGH-M Grinding Series
SZGH-B Handling Series
SZGH-P Painting Series
SZGH-H Welding Series
SZGH-S Scara Robots
SZGH-Arm Four-axis cooperative Robots
Positioners
Robot walking slide rail
Control System
Application display and technical support

SZGH-S450-B-4

Payload		5KG
Reach		450mm
Position detection		Absolute value servo
Supply voltage		220V 50/60HZ
Mounting type		Horizontal
Body weight		29KG
Max. motion range	Axis 1	±125°
	Axis 2	±145°
	Axis 3	±360°
	Axis 4	+100/-80mm
Max. speed (rated state)	Axis 1	360°/s
	Axis 2	360°/s
	Axis 3	720°/s
	Axis 4	800mm/s
Repeatability		+0.03mm
Max. input of air pipe value	Positive pressure	8kg/cm2
	Negative pressure	1kg/cm2
Ambient temperature		5℃ ~ 45℃
Ambient humidity		Within 10% ~ 80% (no condensation)
Arm weight (excluding electric cabinet and extension cable)		≈15KG
I / O line of arm body		0.2 * 5 core
Tracheal interface of arm body		6*2



Main Applications

- Materials Handling
- Parts transmission
- Stacking and dispensing

Application Case

Quick sorting of parts

SZGH-S450-B-4 is a small horizontal joint robot, with flexible and fast in the horizontal direction, high rigidity in the vertical direction, small footprint, high cost performance characteristics, widely used in rapid sorting, precision assembly and other 3C industry, food industry and other fields, the picture is for the chemical industry for material sorting and palleting.



Robot Motion Range

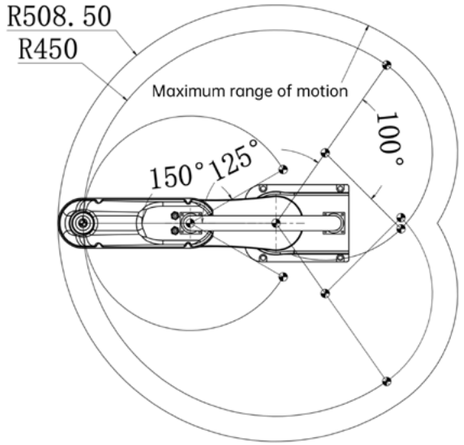

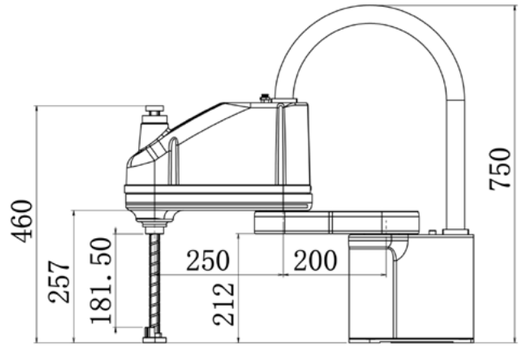

Robot Flange Connection

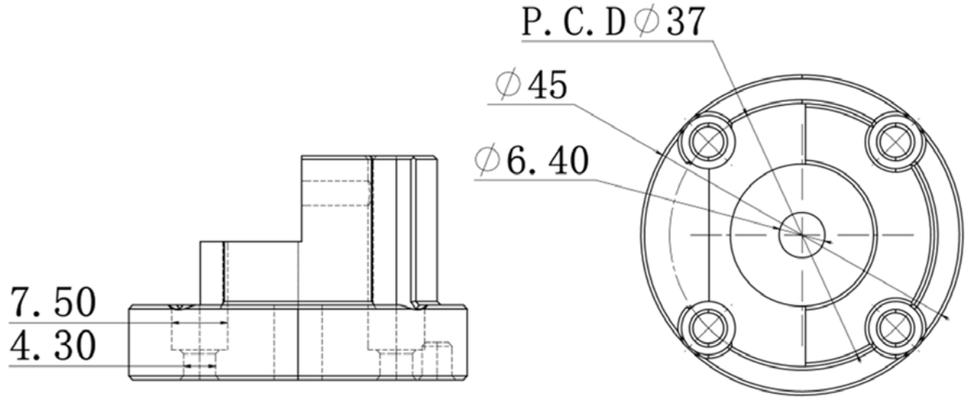

Robot Base Installation

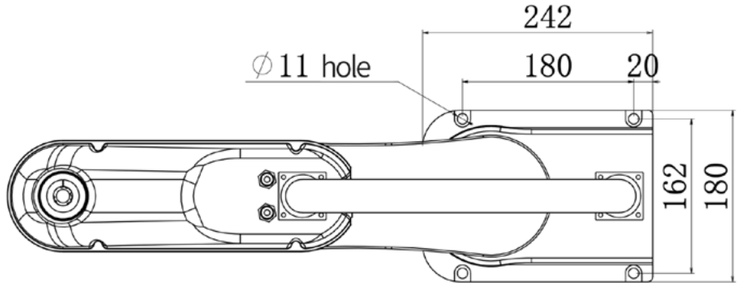

SZGH-S600-B-4

Payload		5KG
Reach		600mm
Position detection		Absolute value servo
Supply voltage		220V 50/60HZ
Mounting type		Horizontal
Body weight		29KG
Max. motion range	Axis 1	±125°
	Axis 2	±145°
	Axis 3	±360°
	Axis 4	+100/-80mm
Max. speed (rated state)	Axis 1	360°/s
	Axis 2	360°/s
	Axis 3	720°/s
	Axis 4	800mm/s
Repeatability		+0.03mm
Max. input of air pipe value	Positive pressure	8kg/cm2
	Negative pressure	1kg/cm2
Ambient temperature		5℃ ~ 45℃
Ambient humidity		Within 10% ~ 80% (no condensation)
Arm weight (excluding electric cabinet and extension cable)		≈20KG
I / O line of arm body		0.2*5 core
Tracheal interface of arm body		6*2



Main Applications

- Materials Handling
- Parts transmission
- Stacking and dispensing

Application Case

Quick sorting of parts

SZGH-S600-B-4 is a small horizontal joint robot, with flexible and fast in the horizontal direction, high rigidity in the vertical direction, small footprint, high cost performance characteristics, widely used in rapid sorting, precision assembly and other 3C industry, food industry and other fields, the picture is for the chemical industry for material sorting and palleting.



SZGH-T General-purpose Series
SZGH-M Grinding Series
SZGH-B Handling Series
SZGH-P Painting Series
SZGH-H Welding Series
SZGH-S Scara Robots
SZGH-Arm Four-axis cooperative Robots
Positioners
Robot walking slide rail
Control System
Application display and technical support

Robot Motion Range

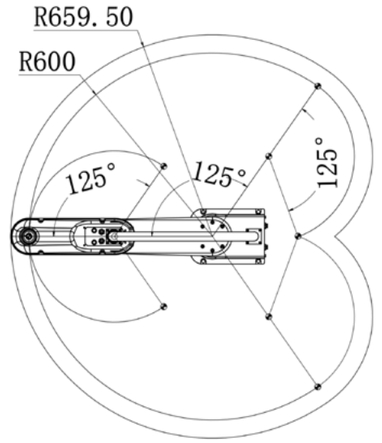

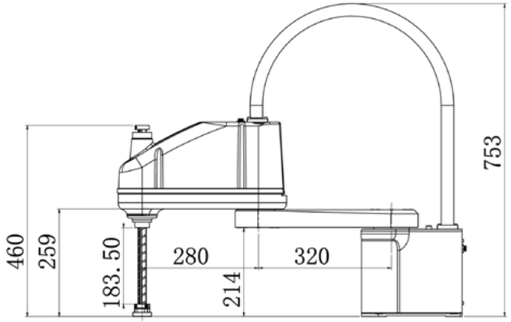

Robot Flange Connection

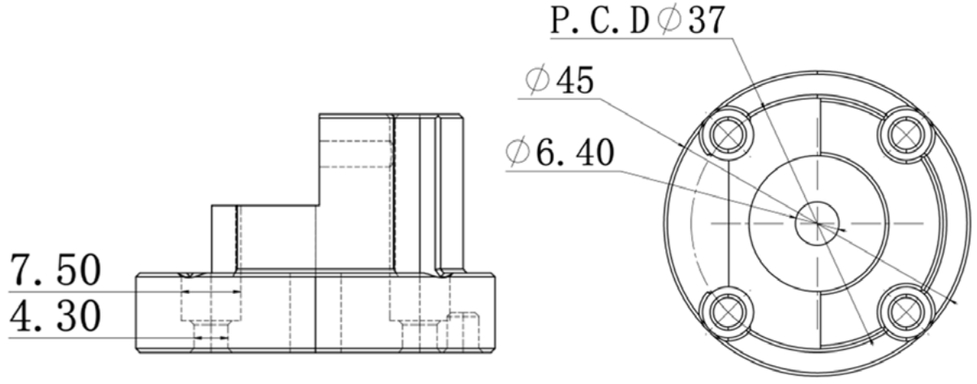

Robot Base Installation

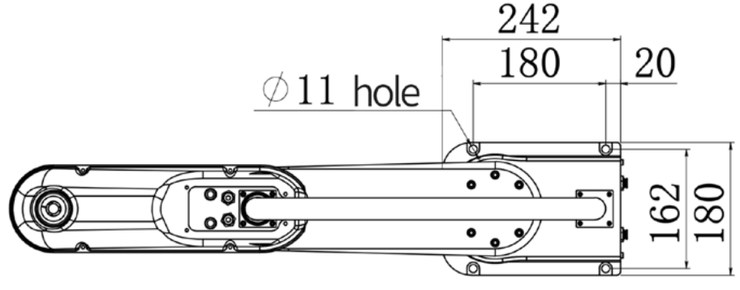

SZGH-T General-purpose Series
SZGH-M Grinding Series
SZGH-B Handling Series
SZGH-P Painting Series
SZGH-H Welding Series
SZGH-S Scara Robots
SZGH-Arm Four-axis cooperative Robots
Positioners
Robot walking slide rail
Control System
Application display and technical support

SZGH-S800-B-4

Payload		8KG
Reach		800mm
Position detection		Absolute value servo
Supply voltage		220V 50/60HZ
Mounting type		Horizontal
Body weight		29KG
Max. motion range	Axis 1	±125°
	Axis 2	±145°
	Axis 3	±360°
	Axis 4	+100/-80mm
Max. speed (rated state)	Axis 1	360°/s
	Axis 2	360°/s
	Axis 3	720°/s
	Axis 4	800mm/s
Repeatability		+0.03mm
Max. input of air pipe value	Positive pressure	8kg/cm2
	Negative pressure	1kg/cm2
Ambient temperature		5℃ ~ 45℃
Ambient humidity		Within 10% ~ 80% (no condensation)
Arm weight (excluding electric cabinet and extension cable)		≈20KG
I / O line of arm body		0.2*5 core
Tracheal interface of arm body		6*2



Main Applications

- Materials Handling
- Parts transmission
- Stacking and dispensing

Application Case

Quick sorting of parts

SZGH-S800-B-4 is a small horizontal joint robot, with flexible and fast in the horizontal direction, high rigidity in the vertical direction, small footprint, high cost performance characteristics, widely used in rapid sorting, precision assembly and other 3C industry, food industry and other fields, the picture is for the chemical industry for material sorting and palleting.



SZGH-T General-purpose Series
SZGH-M Grinding Series
SZGH-B Handling Series
SZGH-P Painting Series
SZGH-H Welding Series
SZGH-S Scara Robots
SZGH-Arm Four-axis cooperative Robots
Positioners
Robot walking slide rail
Control System
Application display and technical support

Robot Motion Range

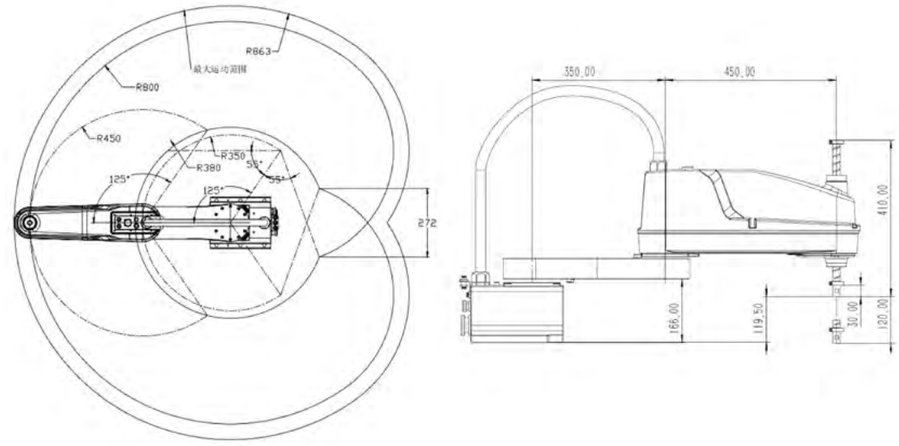

Robot Flange Connection

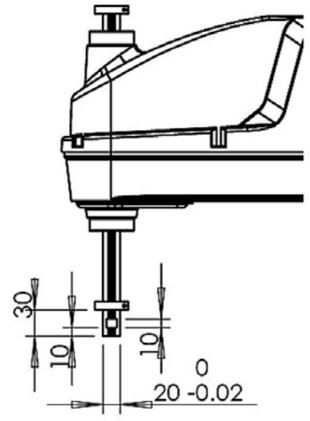

Robot Base Installation

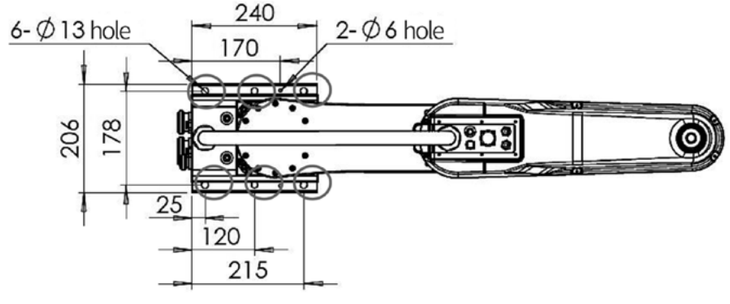

SZGH-T General-purpose Series
SZGH-M Grinding Series
SZGH-B Handling Series
SZGH-P Painting Series
SZGH-H Welding Series
SZGH-S Scara Robots
SZGH-Arm Four-axis cooperative Robots
Positioners
Robot walking slide rail
Control System
Application display and technical support

SZGH-Arm-1832

Axes		4
Standard Load		0.5kg
Max Load		1kg
Weight		11kg
Overall height		500mm
Repeatability(mm)		±0.02
1 axis	Arm length	160mm
	Rotation angle	± 90°
2 axis	Arm length	160mm
	Rotation angle	± 143°
Z axis	Travel	180mm (Highly customizable)
R axis	Rotation range	± 1080°
Line speed(mm/s)		1017
Power supply		220V / 110V
Peak Power(W)		320
Communication		Ethernet/Wi-Fi
Z axis can be customized height(mm)		100~500
Dimensions of the base(mm)		200*200*10
Base fixing hole spacing		160mm*160mm with four M5*12 screws
Collision Detection		Yes
Drag to teach		Yes
Ambient temperature		0~55 ℃
Operating Humidity		RH85 (no frosting)



Main Applications

- Materials Handling
- Laser engraving
- Sorting
- 3D printing
- Labeling
- Dispensing

Application Case

Fully automatic cup splitting equipment

SZGH-Arm-1832 is an integrated four-axis cooperative robot, small, flexible, fast and accurate. As shown in the figure, it is an automatic cup splitting equipment used by our clients to realize automatic nucleic acid detection, which can realize the functions of scanning, opening, pipetting, closing and coding plates of petri dishes.

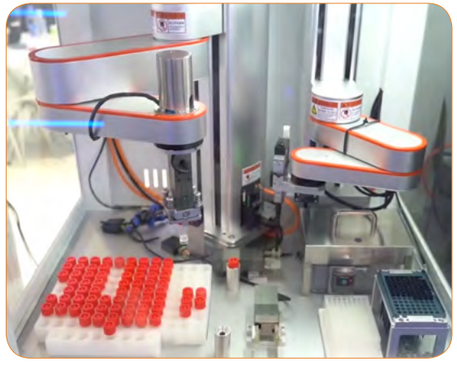

SZGH-T General-purpose Series
SZGH-M Grinding Series
SZGH-B Handling Series
SZGH-P Painting Series
SZGH-H Welding Series
SZGH-S Scara Robots
SZGH-Arm Four-axis cooperative Robots
Positioners
Robot walking slide rail
Control System
Application display and technical support

Robot Overall Dimensions

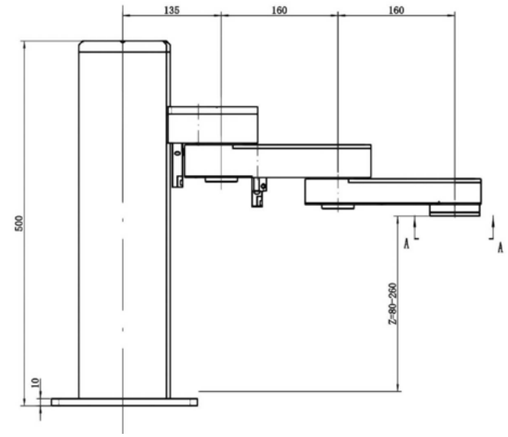

Robot Motion Range

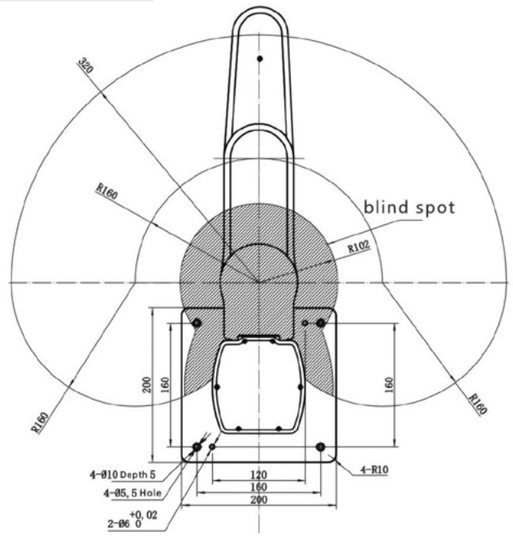

Robot End Flange

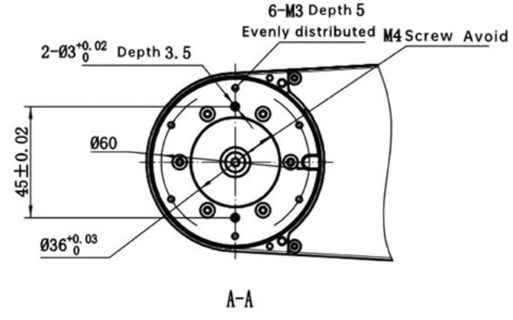

SZGH-T General-purpose Series
SZGH-M Grinding Series
SZGH-B Handling Series
SZGH-P Painting Series
SZGH-H Welding Series
SZGH-S Scara Robots
SZGH-Arm Four-axis cooperative Robots
Positioners
Robot walking slide rail
Control System
Application display and technical support

SZGH-Arm 2442

Axes		4
Standard Load		2kg
Max Load		3kg
Weight		19kg
Overall height		596mm
Repeatability(mm)		±0.03
1 axis	Arm length	220mm
	Rotation angle	± 90°
2 axis	Arm length	200mm
	Rotation angle	± 164°
Z axis	Travel	240mm (Highly customizable)
R axis	Rotation range	±1080°(With mechanical limit)/ ±170°(without mechanical limit)
Line speed(mm/s)		1220
Power supply		220V / 110V
Peak Power(W)		500
Communication		Ethernet/Wi-Fi
Z axis can be customized height(mm)		100-1000
Dimensions of the base(mm)		200*200*10
Base fixing hole spacing		160mm*160mm with four M8*20 screws
Collision Detection		Yes
Drag to teach		Yes
Ambient temperature		0~55 ℃
Operating Humidity		RH85 (no frosting)



Main Applications

Materials Handling

Laser engraving

Sorting

3D printing

Labeling

Dispensing

Application Case

Fully automatic cup splitting equipment

SZGH-Arm-2442 is an integrated four-axis cooperative robot, with 420mm larger arm span, more powerful performance. As shown in the figure, it is an automatic cup splitting equipment used by our clients to realize automatic nucleic acid detection, which can realize the functions of scanning, opening, pipetting, closing and coding plates of petri dishes.

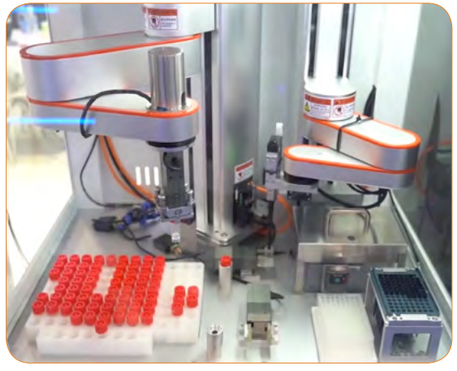

Robot Overall Dimensions

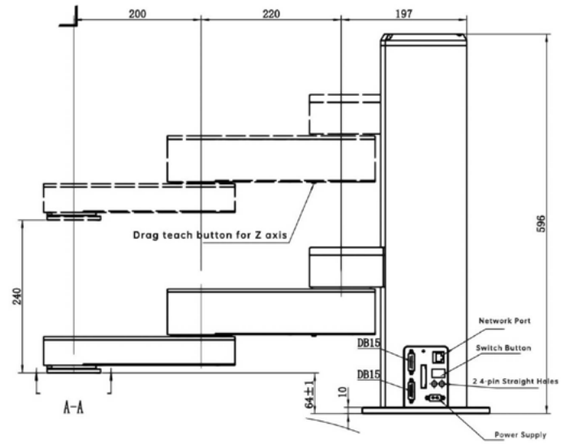

Robot Motion Range

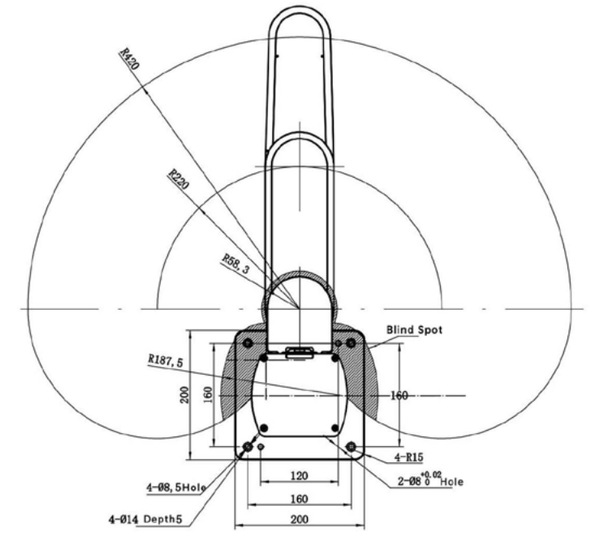

Robot End Flange

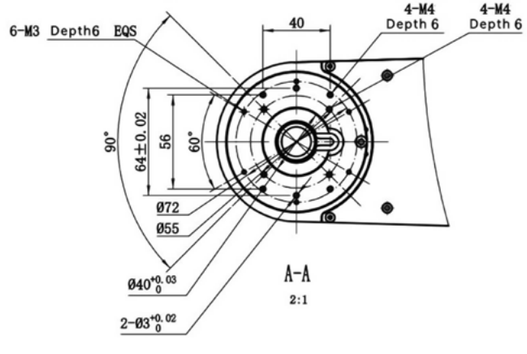

SZGH-Arm-4160

Axes		4
Standard Load		3kg
Max Load		3.5kg
Weight		28kg
Overall height		830mm
Repeatability(mm)		±0.05
1 axis	Arm length	325mm
	Rotation angle	± 90°
2 axis	Arm length	275mm
	Rotation angle	± 164°
Z axis	Travel	410mm (Highly customizable)
R axis	Rotation range	±1080°(With mechanical limit)/ ±170°(without mechanical limit)
Line speed(mm/s)		1500
Power supply		220V / 110V
Peak Power(W)		960
Communication		Ethernet
Z axis can be customized height(mm)		100-1000
Dimensions of the base(mm)		250*250*15
Base fixing hole spacing		200mm*200mm with four M8*20 screws
Collision Detection		No
Drag to teach		No
Ambient temperature		0~55 ℃
Operating Humidity		RH85 (no frosting)

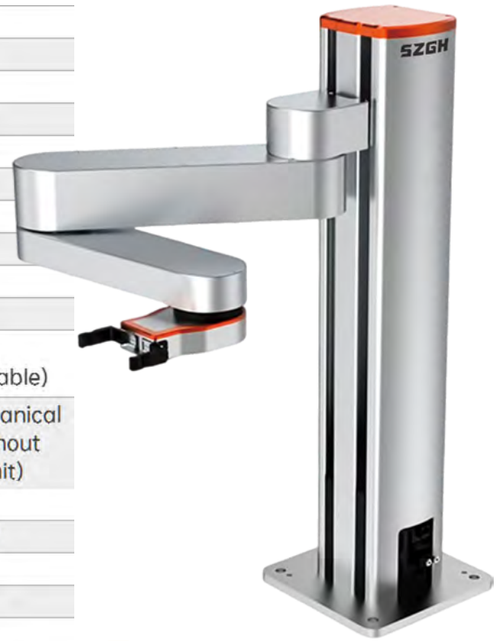

Main Applications

Materials Handling

Laser engraving

Sorting

3D printing

Labeling

Dispensing

Application Case

Fully automatic cup splitting equipment

SZGH-Arm-4160 is a one-piece four-axis robot with a 600mm arm span and a 3.5kg load. As shown in the figure, it is an automatic cup splitting equipment used by our clients to realize automatic nucleic acid detection, which can realize the functions of scanning, opening, pipetting, closing and coding plates of petri dishes.

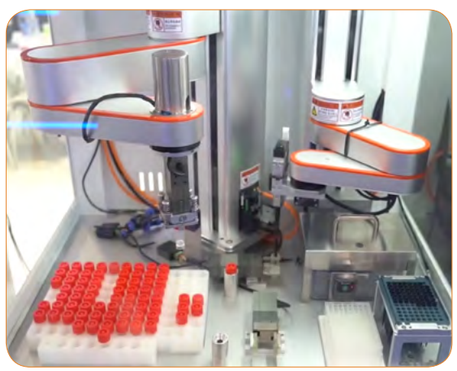

Robot Overall Dimensions

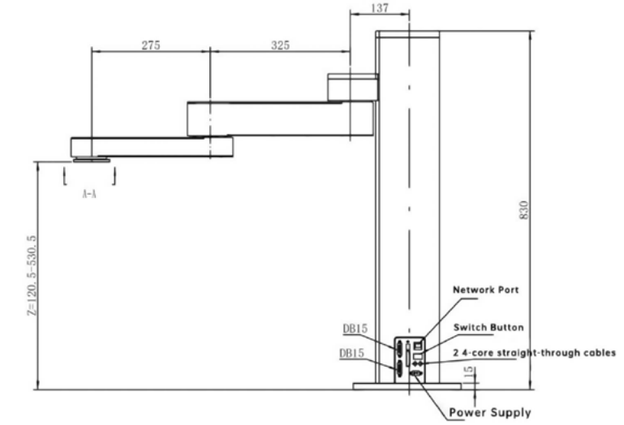

Robot Motion Range

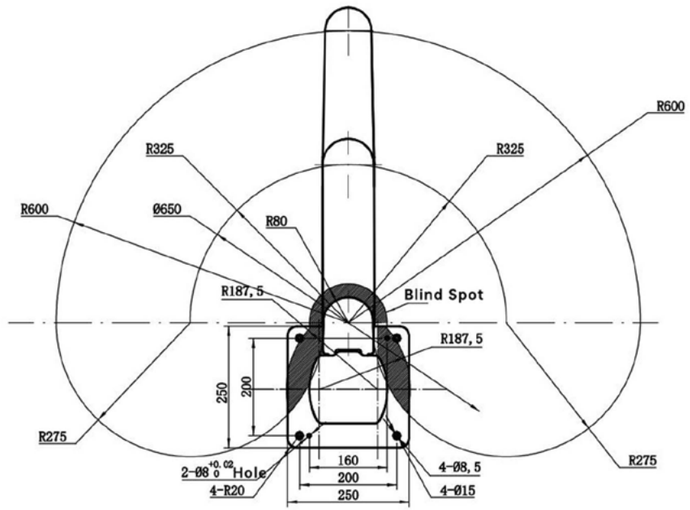

Robot End Flange

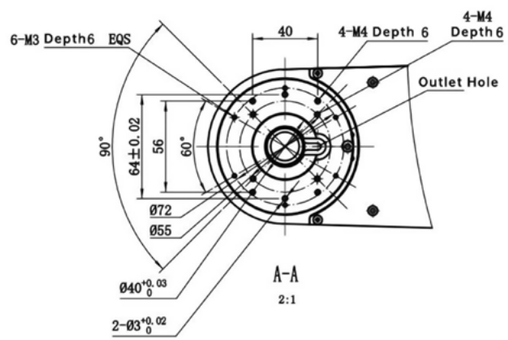

Single-axis positioner

Max.payload	BWJ-F	100kg	
	BWJ-G	200kg	
Rated power	BWJ-F	750W	
	BWJ-G	1500W	
Drive mode		Servo drive	
Rated speed		15r/min	
Noise level		⩽60dB	
Output torque	Speed	BWJ-F	BWJ-G
	5r/min	235Nm	575Nm
	10r/min	190Nm	465Nm
	15r/min	170Nm	415Nm
	20r/min	155Nm	380Nm
	25r/min	145Nm	353Nm
	30r/min	135Nm	335Nm
	40r/min	125Nm	310Nm
Mounting type		Floor	
Ambient temperature		-20℃ ~ 80℃	



Note:
1. The output torque(Nm) determines a constant life at whichever speed.
2. The rated torque refers to the torque at an output speed of 15 r/min and it is the basis for the calculation of life.

Main Applications

Welding

Application Case

Welding of complicated irregular parts

Single-axis positioner is the auxiliary equipment dedicated to welding. It is generally used for the welding of complicated parts. The positioner can turn ±180 ° in the horizontal direction and work in combination with welding robots, thereby significantly expanding the types of parts the robots can weld. The figure shows a customer’ s shop where a single-axis positioner is used with our welding robot for the welding of round pipes.



Positioner Overall Dimensions

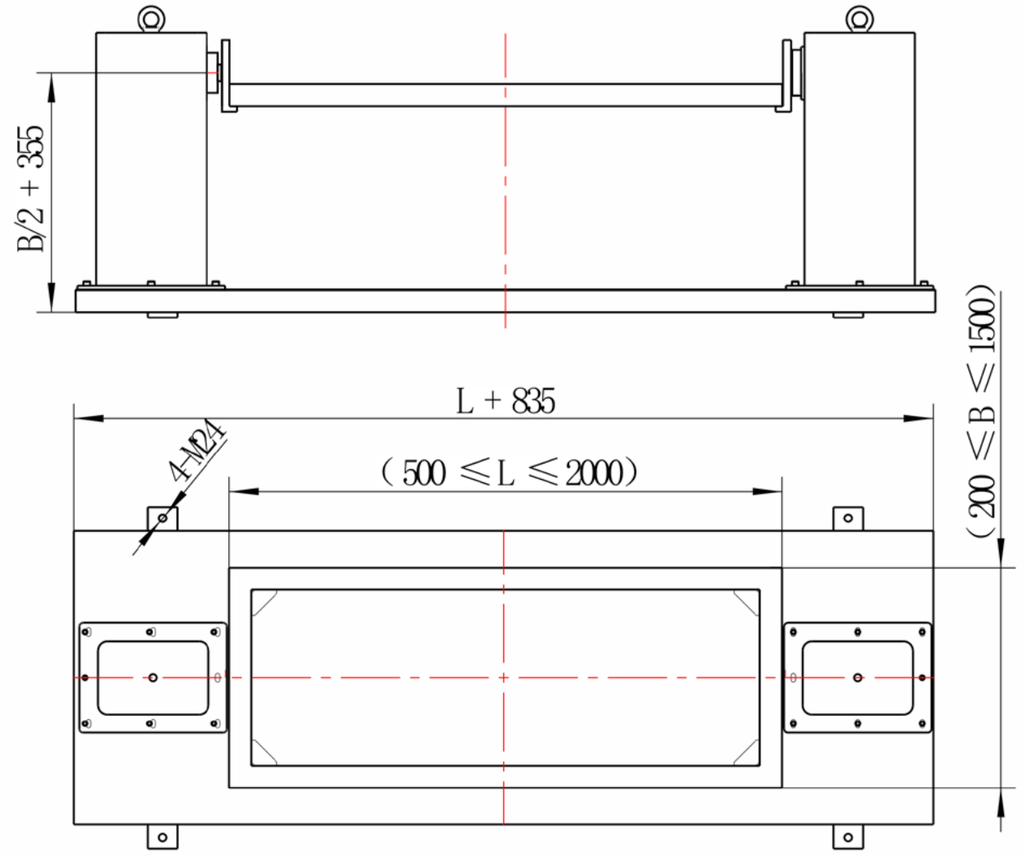

Two-axis positioner



Main Applications

Welding Dispensing

Application Case

Welding of complicated irregular parts

Two-axis positioner is the auxiliary equipment dedicated to welding. It is generally used for the welding of complicated parts. The positioner can turn ±180 ° in horizontal direction and vertical direction and work in combination with welding robots, thereby significantly expanding the types of parts the robots can weld. The figure is the proofing process we showed for clients, in which the two-axis positioner is used together with the welding robot for the welding of the cuboid workpiece.



SZGH-T General-purpose Series
SZGH-M Grinding Series
SZGH-B Handling Series
SZGH-P Painting Series
SZGH-H Welding Series
SZGH-S Scara Robots
SZGH-Arm Four-axis cooperative Robots
Positioners
Robot walking slide rail
Control System
Application display and technical support

Positioner Overall Dimensions

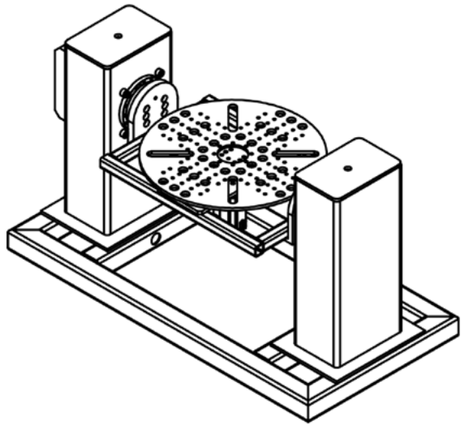

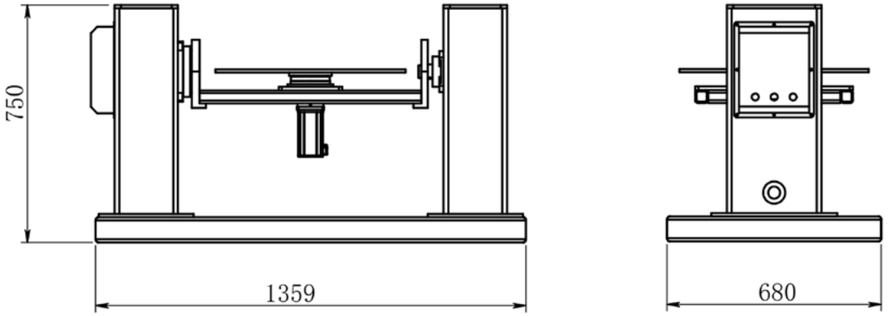

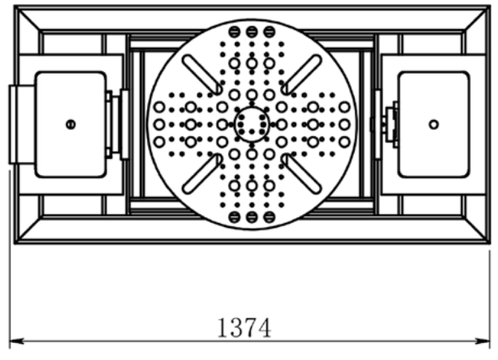

SZGH-T General-purpose Series
SZGH-M Grinding Series
SZGH-B Handling Series
SZGH-P Painting Series
SZGH-H Welding Series
SZGH-S Scara Robots
SZGH-Arm Four-axis cooperative Robots
Positioners
Robot walking slide rail
Control System
Application display and technical support

Two-axis positioner



Main Applications

Welding

Dispensing

Application Case

Welding of complicated irregular parts

Two-axis positioner is the auxiliary equipment dedicated to welding. It is generally used for the welding of complicated parts. The positioner can turn ± 180° in horizontal direction and vertical direction and work in combination with welding robots, thereby significantly expanding the types of parts the robots can weld. The figure is the proofing process we showed for clients, in which the two-axis positioner is used together with the welding robot for the welding of the cuboid workpiece.



SZGH-T General-purpose Series
SZGH-M Grinding Series
SZGH-B Handling Series
SZGH-P Painting Series
SZGH-H Welding Series
SZGH-S Scara Robots
SZGH-Arm Four-axis cooperative Robots
Positioners
Robot walking slide rail
Control System
Application display and technical support

Positioner Overall Dimensions

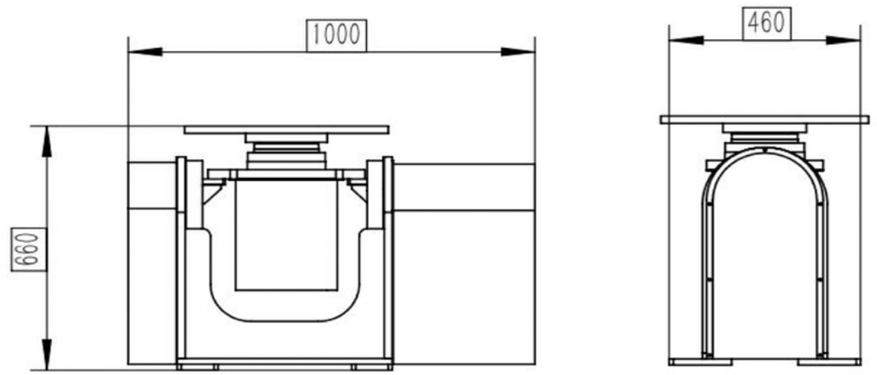

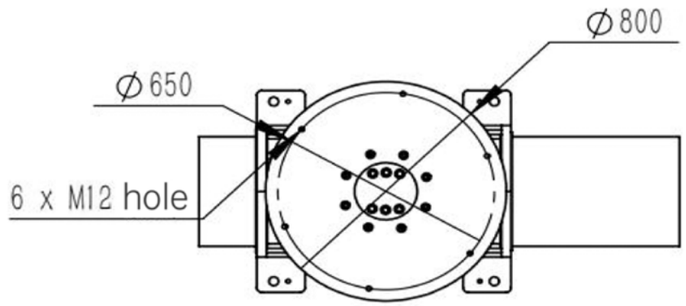

SZGH-T General-purpose Series
SZGH-M Grinding Series
SZGH-B Handling Series
SZGH-P Painting Series
SZGH-H Welding Series
SZGH-S Scara Robots
SZGH-Arm Four-axis cooperative Robots
Positioners
Robot walking slide rail
Control System
Application display and technical support

Three-axis positioner

Number of shafts	3
Installation method	floor type
Active radius	1200mm
Maximum load	10kg
Rated power	2kW
Noise level	≤60dB(a)
Revolving motor	3-phase asynchronous motor 750kW, AC220V
Self rotating motor	servo motor 400W, AC220V
Cross dimension of the turntable	700mm * 700mm
Rotation speed	0-900°/sec (adjustable)
Revolution speed	0-70°/sec (adjustable)

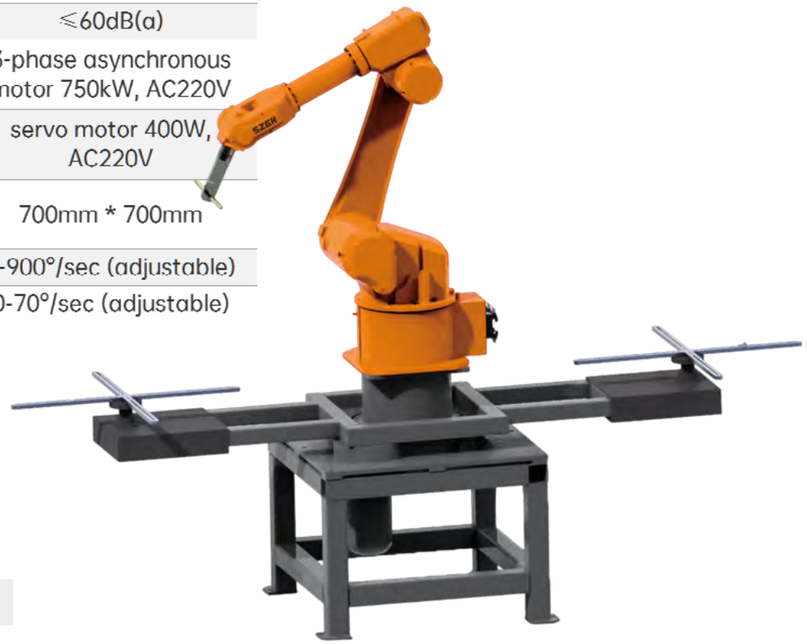

Main Applications

Painting

Application Case

Nine-axis linkage spraying Robots

This model is composed of an industrial six axis robot and a three-axis rotating frame, with a total of nine axes.This is the site diagram of the production workshop where the company installed two nine axis Spraying Robots for a customer. In addition to improving the spraying efficiency, it can well protect workers from spraying materials.



Diagram of 9-axis Rotary Carriage Motion Range

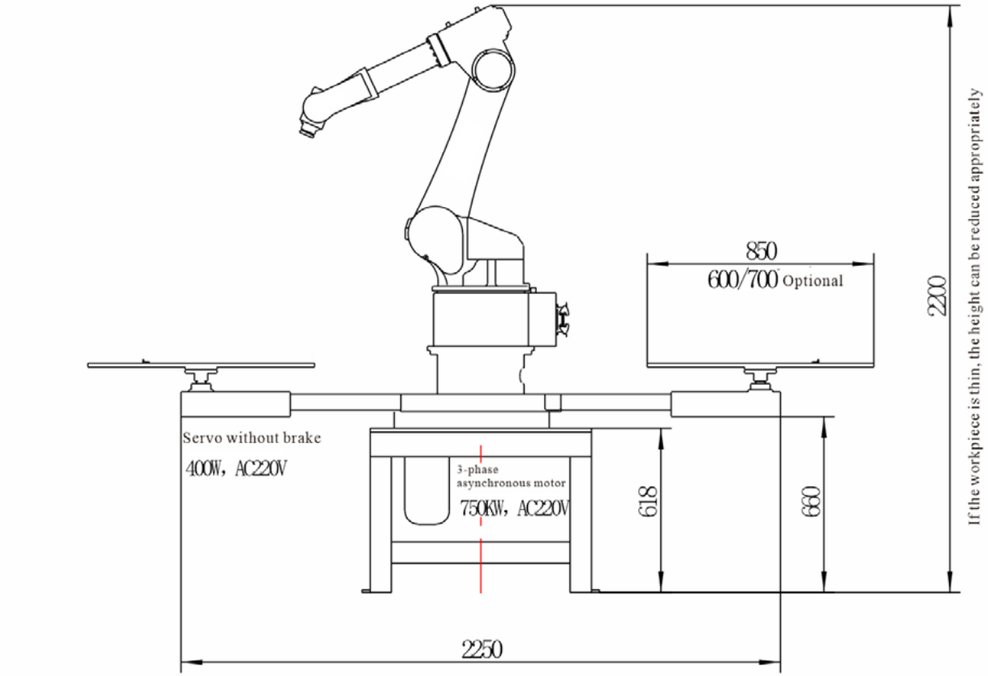

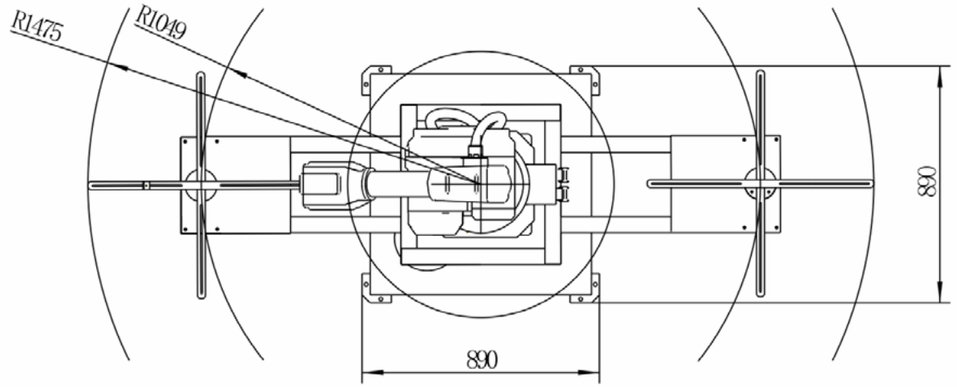

Note: the default matching manipulator of this equipment is LT1500-B-6. Please refer to the previous catalog for the motion range diagram and relevant specific parameters.

SZGH-T1500-B-7

Payload		6KG
Structure		Articulated
Number of axes		7
Repeatability		±0.1mm
Max. motion range	Axis 1	±165°
	Axis 2	+75°/-135°
	Axis 3	+175°/-80°
	Axis 4	±360°
	Axis 5	±115°
	Axis 6	+450
	Axis 7	------
Max. speed	Axis 1	148°/sec
	Axis 2	148°/sec
	Axis 3	150°/sec
	Axis 4	222°/sec
	Axis 5	222°/sec
	Axis 6	360°/sec
	Axis 7	1m/sec
Mounting type		Ground
Ambient temperature		0°C ~ 45°C

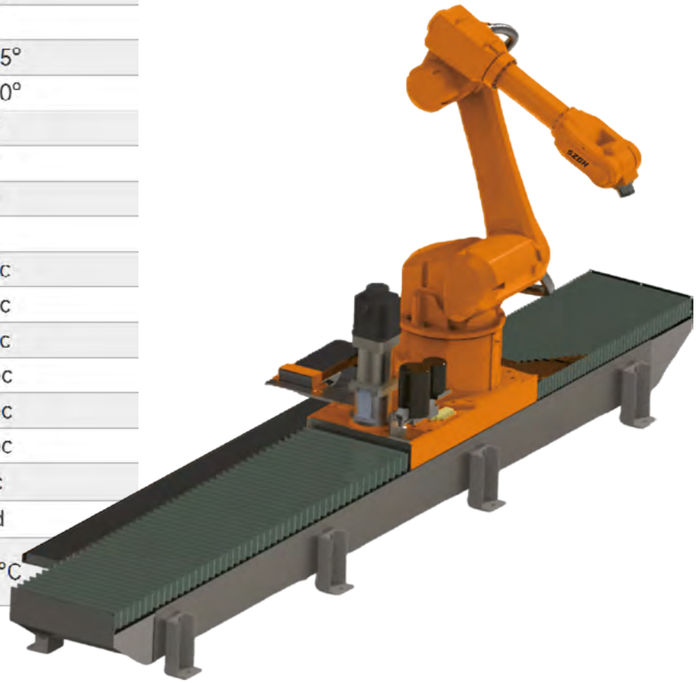

Main Applications

Welding | Spraying | loading and unloading | Materials Handling

Application Case

CNC machine automatic loading and unloading

The robot walking slide rail adds extra axis of movement to the robot, so that the robot can move freely in one direction, greatly increasing the working range of the robot. In the picture, our customer added a walking slide rail to his robot, enabling one robot to automatically load and unload materials for three machine tools.



Diagram of 7-axis robot motion range

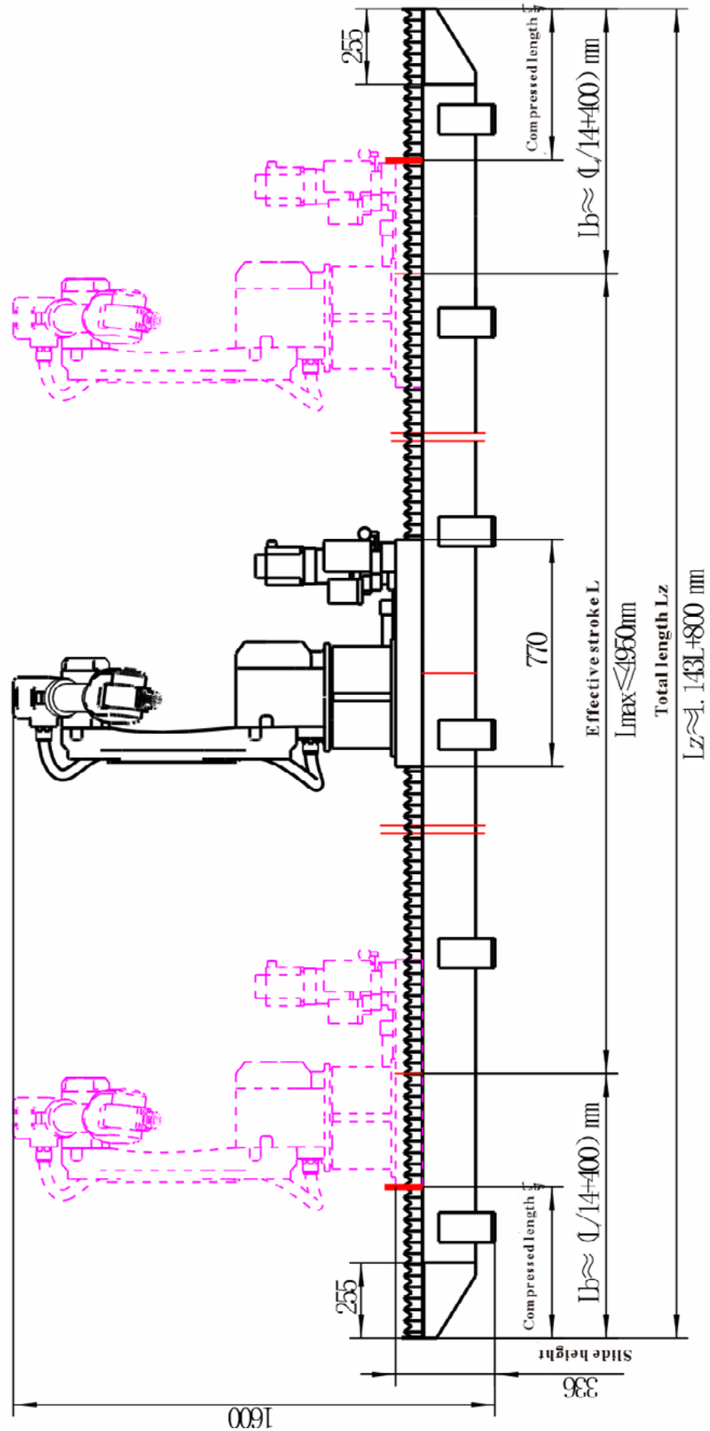

Note: the sliding table can carry any six axis manipulator of the company. Please refer to the specific chapters for the movement range of the manipulator

Features of Robot Control System

- Structural optimization algorithm suitable for the body control of various types of structure.
- Modular setting of functions suitable for diverse applications.
- 6 axis + 6 axis control realizes the control of external axes (traveling axes and positioner).
- Suitable for multiple increments; absolute servo.
- Open structure for synchronization of international technology and extension of functions.
- Software PLC functions facilitate logic control.
- Process functions make programming easy.
- Improved computer bus connection ensures reliability and practicability.
- Safety module ensures safe production of the robots.
- Industrial standards &reliable stability.
- Online teaching panel.



Technical Data of Robot Control System



Storage	2GB
Teaching box	Full keyboard+touch screen, mode select switch, safety switch, emergency switch
No.of controlled axes	6+6 axes, 6 basic axes +6 external axes
Interface	Multiple encoder signal interfaces, dedicated interface for robot terminal, Ethernet interface, serial communication
Safety module	The emergency and robot anomaly signals are linked to ensure rapid stop of the robot
Mode of operation	Teaching, representation, remote control
Mode of programming	Online teaching, process programming, teaching by dragging
Motion function	Point-to-point, linear, circular
Command system	Motion, logic, process, computation
Mode of control	Position control
Anomaly detection Function	Emergency stop anomaly, servo anomaly, anti-collision, safety maintenance, arcing anomaly, user coordinate anomaly, tool coordinate anomaly

SZGH-T General-purpose Series
SZGH-M Grinding Series
SZGH-B Handling Series
SZGH-P Painting Series
SZGH-H Welding Series
SZGH-S Scara Robots
SZGH-Arm Four-axis cooperative Robots
Positioners
Robot walking slide rail
Control System
Application display and technical support

Robot factory for improveing your management system

1 High-level robot scheme for improving production performance



A dynamic robot model integrated in the system offers continuous computation of the torque produced by each drive and the robot makes compensation accordingly. It has the following strengths:

- It can be controlled within the mechanical, limit at any time, thereby extending the robot life;
- The cycle time can be gained through optimized use of physical limits;
- Highly precise motion paths are obtained based on minimized path error;
- The cost is reduced through optimization of robot design.

2 Suitable for Any Complicated Applications

Applications requiring high synchronization precision of robots, such as painting, binding and welding. The dynamic paths and dynamic motion behaviors must comply with the strict requirements, so highly efficient robot technology can ensure correct operations.

- Realize high synchronization of motion and operation based on trigger points with prediction functions.
- Constant traveling speed can be kept even in volatile environment, thereby ensuring high-quality treatment processes.
- Precise Cartesian paths are used for all geometric models of the robots.

3 Easy to Learn & Easy to Operate

- The hardware of all electric appliances adopts imported famous high-quality accessories;
- The software is the Chinese operating system developed by our company;
- Easy to learn: you can master their operation in 2h.



SZGH-T General-purpose Series
SZGH-M Grinding Series
SZGH-B Handling Series
SZGH-P Painting Series
SZGH-H Welding Series
SZGH-S Scara Robots
SZGH-Arm Four-axis cooperative Robots
Positioners
Robot walking slide rail
Control System
Application display and technical support

B6 Control Cabinet



Control Cabinet Size

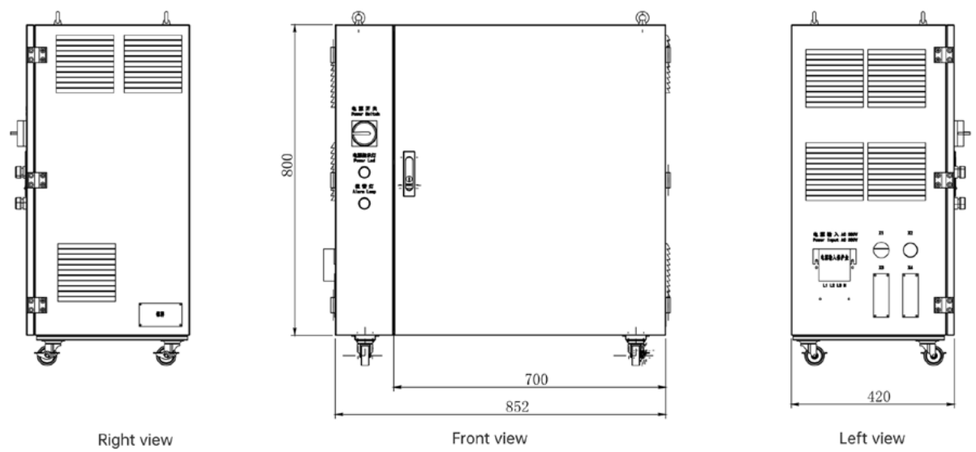

Right view　　Front view　　Left view

A8 Control Cabinet



Control Cabinet Size

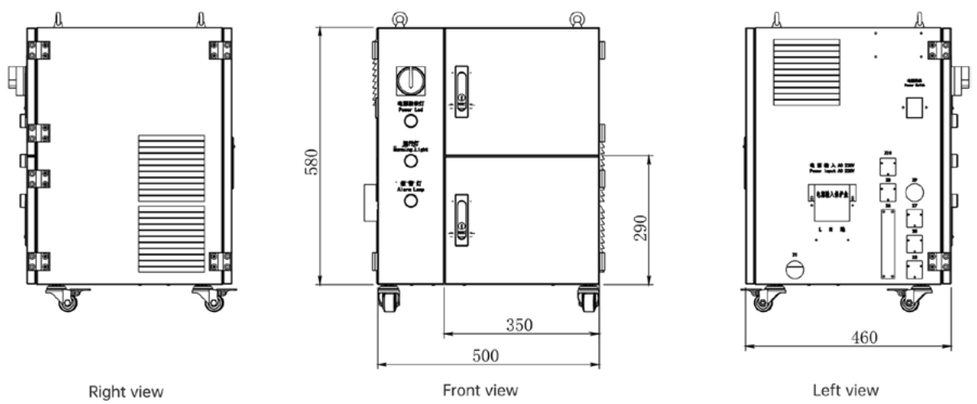

Right view　　Front view　　Left view

A4 Control Cabinet



Control Cabinet Size

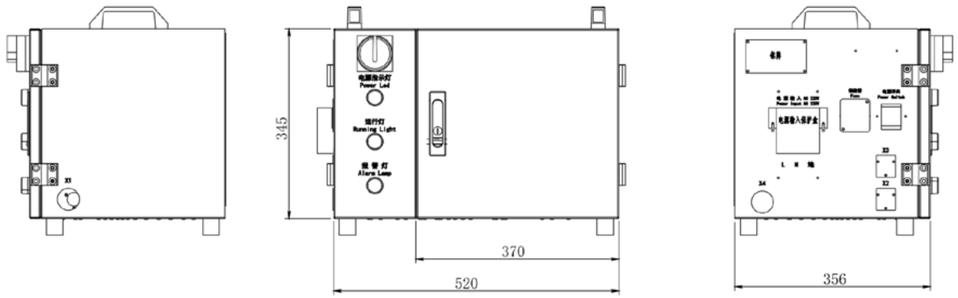

Right view　　Front view　　Left view

Instructions for Accessories Welding equipment

1. Max. operating distance of teaching device and robot electric cabinet

The standard cable length of the teaching device is 5m; the standard cable of the robot and electric cabinet is 3m long.

2. Max. distance between robot and electric cabinet

This distance is the length of the straight-through cable. It is generally 6m by default. Other lengths can be customized.

Application Industry

Manufacturing industry　Auto industry　Chemical industry

3C Electronics industry　Furniture industry　Medical industry

New Retail Industry　Education industry　Other industries

Application Scenarios

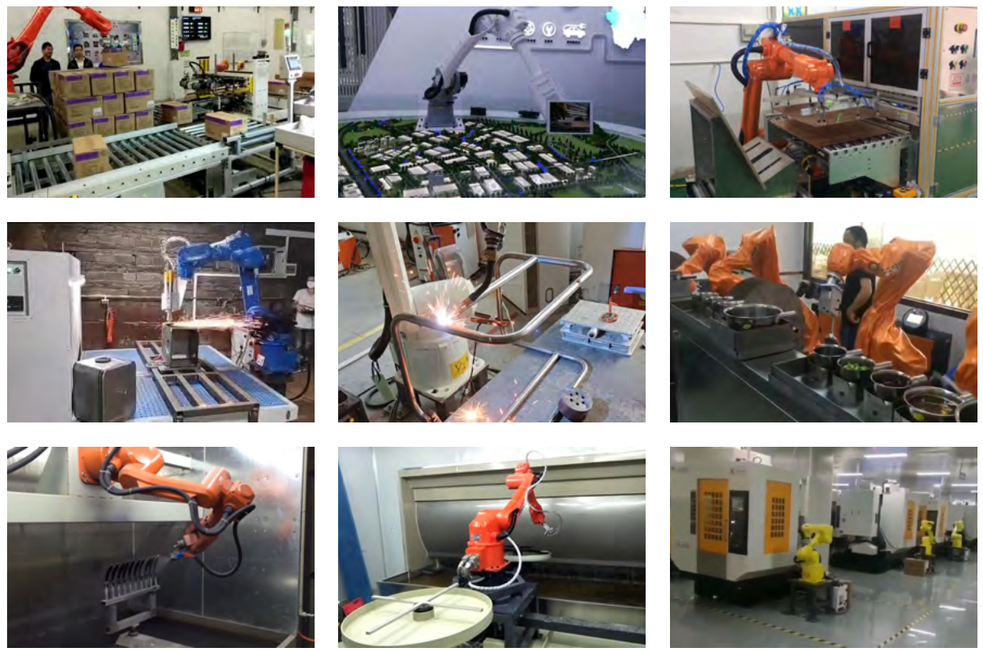

Industrial robots are high-tech automated equipment integrating advanced technologies of machinery, electronics, control, computer, sensor, artificial intelligence and various other disciplines. They can meet the requirements of such operations as spot welding, arc welding, cutting, grinding, handling, palletizing, painting and parts inspection.

Loading & unloading robots for machine tools

- Loading, unloading and transfer robot solutions for NC machines tools and machining centers;
- Loading and unloading robots for stamping operations and stamping presses with which they are connected;
- Loading and unloading robot solutions for other hardware.



Palletizing and handling robots

- 10 kg/20 kg palletizing robots are widely used in various applications;
- Use of robots for picking, loading and positioning of materials on customer's conveyors as well as packaging;
- Robot handling cases and solutions for food, plastics, chemical fertilizers and other industries.



Spray painting robot

- Ceramic closestool and bathroom accessory enameling robot solutions;
- Toy and home appliance enclosure painting;
- Plastic product surface painting, and use in combination with corresponding water curtains;
- Automobile and machine tool enclosure painting solutions.



SZGH-T General-purpose Series
SZGH-M Grinding Series
SZGH-B Handling Series
SZGH-P Painting Series
SZGH-H Welding Series
SZGH-S Scara Robots
SZGH-Arm Four-axis cooperative Robots
Positioners
Robot walking slide rail
Control System
Application display and technical support

SZGH has participated in exhibitions in Shanghai, Wenzhou, Shenzhen, Dongguan and other places, where the main exhibits are general-purpose robots.



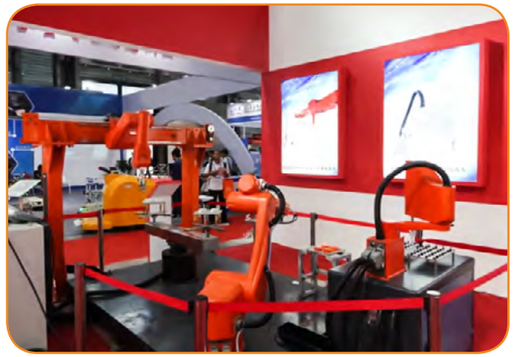

- Robot Exhibition SZGH-T1500-B-6





- Robot Exhibition SZGH-B2400-F-4





- Robot Exhibition SZGH-P1950-B-6

SZGH-T General-purpose Series
SZGH-M Grinding Series
SZGH-B Handling Series
SZGH-P Painting Series
SZGH-H Welding Series
SZGH-S Scara Robots
SZGH-Arm Four-axis cooperative Robots
Positioners
Robot walking slide rail
Control System
Application display and technical support

Engineering Services

SZGH Engineering Department is engaged in industrial robot production and control system R&D services and can offer a full range of services for the field of industrial automation, including engineering design, product design, hardware integration, software programming, field commissioning, customer training and aftersales maintenance, etc.

System Integration

- Customized automation system solutions complying with production process requirements
- Professional and complete engineering technical support
- Advanced software design and implementation capability
- Safe and effective engineering commissioning
- Complete aftersales technical service system

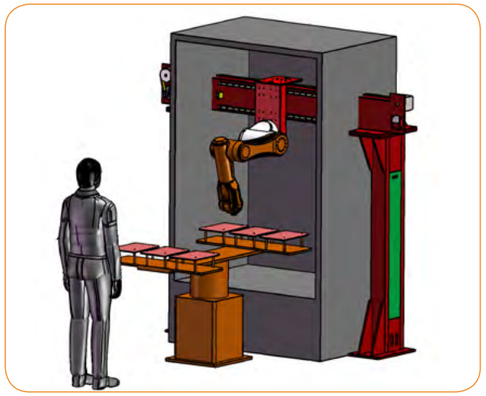

- Gantry spraying device

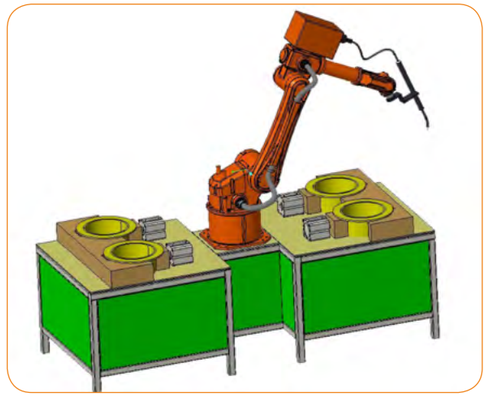

- Application of 4-station welding robot

System Upgrade & Continuous Optimization

- Reduced equipment investment pressure, more product specifications and varieties, and improved quality;
- Continuous upgrade can ensure stable equipment operation and significantly enhance labor efficiency;
- System improvement makes the system run at higher speed and improves productivity;
- The integrity of equipment functions is maintained;
- The performance is upgraded and optimized and functions required by customers are added;
- Faults occurring in the operation of old system versions are avoided;
- The robot kinematic control algorithm is continuously optimized, making it suitable for the control of various types of structures;
- Modular function setting is optimized, thereby expanding their applications.

Customization of Integrated Robot Support Solutions and Design of Painting Equipment Application Lines for Customers

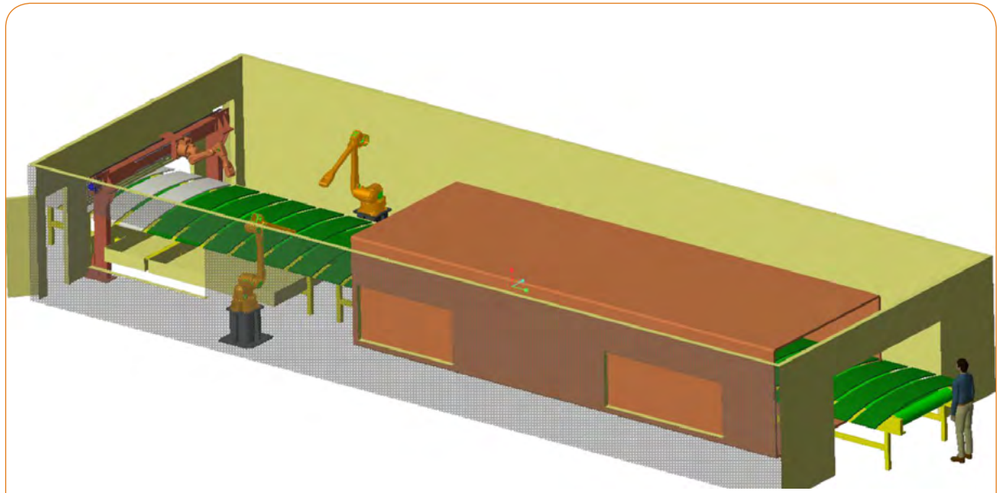

- Professional non-standard design engineering team, diverse design styles, and demonstration to customers in the form of 3D, CAD, animation, etc.;
- Non-standard design to support robot motions can enhance robot efficiency;
- Non-standard simulation can be introduced for project design, so that customers can reduce costs before investment;
- Humanized design enhances the flexible application of equipment.

Humanized Nonstandard Design and More Knowledge of Customer Desired Effects

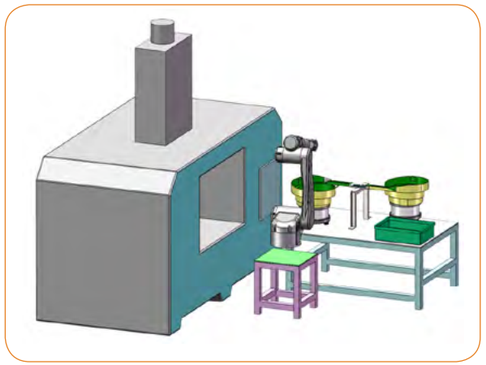

- Loading, Unloading and Transfer Equipment for Machine Tool

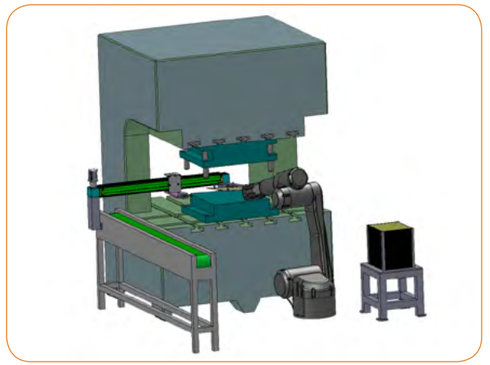

- Loading, Unloading and Transfer Equipment for Stamping